Subject:— Matchwoods for M/S W.I.M. Co — Revision of rates.

Mysore Government Secretariat

[App. F. III 2

File No. AFD 86 of 196 FDP 62.

Serial No.	
1.	D. No: 8491 — Letter dt: 1.11.62 from M/S W.I.M. Co. — 8/c.
2	D. No: 9886 — Telegram dt: 12.12.62 from M/S W.I.M. Co. — 11/c.
3.	D. No: 9950 — — do — (Post copy). — 12/c.
4.	In view of the steep rise in the prices of timber it is felt expedient to revise the rates of timber species allowed for extraction by the Match & Plywood Industries. With a view to discussing this subject, a meeting was held in the chambers of Min (F&F) on 30-10-62, vide Proceedings of the meeting at Flag A. In the meeting the Representatives of different Industries were asked to give in writing the species of timber, areas and the rates of the timber they require from Govt. Forests. In response, M/S W.I.M. Co. have offered a rate of Rs. 50/- per ton for all the species which they are exploiting. This proposal could not be put up earlier as the

Note.—Contn. Sheet

Serial No.

relevant file No: AFD 8 THS 58 is in action, having been marked to F. D. on 16.11.1962. However a fresh file has been opened now and submitted.

originally four timber species were conceded to M/S WIMCO for extraction from the forests of North Kanara & South Kanara, vide G.O. of 4.12.57 (Page 1 (CF). Subsequently, a few more species in the additional areas were conceded, vide G.O. dt. 8.11.60, at Page 5 (CF. On an average M/S WIMCO are paying at the rate of about Rs. 45/- per ton for the match woods extracted by them. Their present offer of Rs. 50/- per ton for all the species they take would mean an increase of about Rs. 5/- per ton of timber. 5.

Submitted for consideration and orders.

MH.
18.12.62.

Serial No.

Agriculture & Forest Department
(Forest Section)

---

7 Reference is invited to Government Orders-copies placed in the corresponding file (at pages 1, 2, 3 and 5 to 7) pertaining to the lease of match wood to M/s. WIMCO. Since the main file has been sent to Finance Department in another connection on 18th December, 1962 and the same is not required for pursuing the subject matter, a separate file (supplemental) has been opened and put up for urgent orders with relevant papers to decide the issue.

8 Originally in Government letter dated 4th December 1957 (p. 1 c/f), four species were allotted for extraction to this company in North and South Kanara Forests at the rates noted below:-

Species	Rates offered by the Co. and accepted by the Government
Bombax	Re. 1/- per cft. or Rs.50/-per ton (Girth 48" and above)
	Rs.0-15-0 per cft. or Rs.46-14-0 per ton (Girth 33" upto and exclusive of 48")
Other species*	Rs. 0-14-0 a cft. or Rs. 43-12-0 per ton.

*Machilus Mercrantha, Ganarium Strictum, Magnifera Indica.

It was indicated therein that the rates are operative for a period of five years with effect from 1-1-58. This period ~~having been expired~~ will expire on 1-1-1963. But the period was extended in Government Order dated 23rd May 1960 (p.3 c/f) wherein it had been indicated that the extension has been granted for a further period of 5 years from 1-1-1963. In the same G.O. it has been stated that the rates may be revised even before this period of 5 years if circumstances so warrant and favourable to Government. Again in Government Orders dated 26th March 1960 (p. 2 c/f) and 8-11-1960 (p. 5 c/f), 10 species noted therein

Note.—Contn. Sheet

Serial No.

required for match wood industries were given to the Company in the additional areas in the Circles of Belgaum, Shimoga and Coorg as indicated therein. In the last para of the Government Order, it was again clearly indicated that even though the period of lease for the above extraction will be from the date of the Order till 31-12-1967, Government ~~were~~ are at liberty to revise the rates even before if circumstances so warrant. Now time has come for revising these rates because there is steep rise in the rates of softwood required for match industries and also the revision is necessary because the other Companies dealing in soft woods for whom we have recently given extension have agreed for enhancement in rates.

This subject was discussed twice - once in the chambers of the Secretary to Govt., A&F Dept. on 19-9-62 when all the representatives of the Companies dealing in soft woods were present and another time on 30th October,62 in the chambers of the Minister for Forests. Copies of the proceedings of the two meetings are placed below (Flag A) for kind perusal. The position was clearly explained at those meetings to the representatives of the Company and they themselves were requested to indicate in what way they would co-operate with the Government by accepting higher rates than what they are at present paying under the terms of contract. A suggestion has also been given to them to indicate the probable enhancement in rate which they would voluntarily agree. Sri Harihara Iyer - the representative of the WIMCO indicated at the meeting that ~~he~~ Company would agree for a uniform rate of Rs. 50/- per ton of 50 cft.in respect of all the species (superior and inferior) which are

9

Serial No.

allotted to them even though different rates, ranging from Rs. 43-75 nP. to Rs.50/- per ton are being paid by them under the existing contract. In the present letter dated 1-11-1962 (p-8 c/f.), he has confirmed this offer of his re-enhancement in rate.

10 In the same letter, the representative of the Company has opined that while revising the rates of the matchwoods, a number of factors should also be taken into account as indicated by him in page 9 c/f. He has also indicated therein that if Government feel that still higher rate than what is offered by him is felt necessary, an opportunity may be given by Government to him for discussion so that the rates may be revised after mutual discussion. The file therefore may be submitted to the Minister for Forests for kind orders as to whether the rate of Rs. 50/- per ton as offered by the Company in respect of all the species that are given to them (superior and inferior) may be accepted with effect from 1-1-1963 in consultation with F.D. or whether it is necessary to enhance it still more after mutual discussion in consultation with the Company.

20/12/62
(T.S.Ramaiya)
Under Secy. to Govt.,
A&F Dept.(Forests)

D.S.

Secy.

DEPUTY SECRETARY TO GOVT. NO. 2889/F 20 DEC 1962 AGRICULTURE & FOREST DEPTT.

AGRICULTURE & FOREST SECRETARY 6691 20 DEC 1962 GOVERNMENT OF MYSORE

Note.—Contn. Sheet

P.T.O

Match wood to M/s. WIMCO -- Revision of rates.

File No. AFD 86 FDP 62 of 196.

Mysore Government Secretariat

Serial No. 11.

To-day I happened to meet Mr. T.A. Harihara Iyer, Wood Manager, WIMCO, while I was perusing the file concerned. He pointed out that the increase over the present rates in the royalty, which is being paid to the Government of Mysore with regard to 13 species of wood which his Company is being supplied for Match-wood production, is not justifiable since the ceiling rate of selling of matches is being fixed by the Government of India. But, since the matter is urgent and as there is a clause that the rates are liable to be enhanced subject to mutual adjustment and on my pressing him to agree for the same and suggest a feasiable method for increasing the present rate over the rates, which his Company is paying, he agreed to raise the present rates as follows with regard to the species mentioned below:

(1) Bambax Malabaricum from Rs 50/- to Rs 55/- per Ton of 50 Cft. -increase Rs 5/-.

(2) Other species, from Rs 50/- to Rs 52/- per Ton of 50 Cft -- increase Rs.2/-.

Here, since the rates admitted and agreed to by him are quite reasonable under the present circumstances, I submit whether these rates could be accepted.

For kind perusal and orders.

12.

AGRICULTURE & FOREST SECRETARY No ..... 24 DEC 1962 GOVERNMENT OF MYSORE

13.

(Y.C. HOMBALAYYA),
Secretary to Government,
A & F. Deptts.

22.12.62

14.

AGRICULTURE & FOREST SECRETARY 6691 22 DEC 1962 GOVERNMENT OF MYSORE

MINISTER FOR FORESTS) How does it compare with tender rates offered by messrs Dodda-nanawar & Co and also tender rates offered by Plywood Co. Hunsur. The rates prevailing in Kerala and other neighbouring States will help Govt in fixing the reasonable rates.

S A & F) XXX 24-12

OFFICE OF THE MINISTER FOR FORESTS No. 72295/62

WD 010154-GPB-PZS-8,00,000-1-10-61

24/12/62

B. RACHAIAH,
Minister for Forests and Fisheries.

Serial No.

Ref. Para 14 n.f.

15. The rates sanctioned to M/s. Doddannavar Bros. are as follows:-

1. Terminalia Belerica (Ghoting)	Rs.30/-	per ton of 50 cft.
2. Tetrameles nudiflora (Jarmal).	50/-	-do-
3. Semicarpus anacardium (Bibba)	50/-	-do-
4. Holigarma arattina (Holgeri)	50/-	-do-
5. Banhinia lowii (Apta)	30/-	-do-
6. Strychnox nuxnomica (Kajra).	40/-	-do-
7. Stereospurmum Shelonoides (Padle)	30/-	-do-
8. Mangifera Indica (Mango) (Trees left out by M/s. WIMCO)	75/-	-do-

16. The rates offered by M/s. Hunsur Plywood works are as follows:-

1. Acrocarpus fraxinifolius (Belanji)	Rs. 70/-
2. Calophyllum Spp. (Poon)	70/-
3. Cedrela toona (Noga)	70/-
4. Dipterocarpus indicus Odina wodier. (Kalpaina)	70/-
5. Diphopsis elliptica (Pali)	70/-
6. Vateria indica (Vellapine)	70/-

17. The C.C.F. has proposed a rate of Rs.2/- to Rs. 2-25nP. per ton in this respect and the Hunsur Co. has been asked to inform whether they are agreeable to pay at the rate of Rs.2/- to Rs.2-25 nP. per ton of timber.

18. The rates offered by M/s. WIMCO are as follows:-

1. Bombax malabaricum.	Rs. 55/- per ton.

2. Ailanthus excelsa	Rs.52/- per ton.	
3. Ailanthus malabaricum	52/- -do-	
4. Alstonia scholoris	52/- -do-	
5. Canarium strictum	52/- -do-	
6. Elacocarpus tubercalatos	52/- -do-	
7. Syimplecos speiata	52/- -do-	
8. Hynecnoshityôn	52/- -do-	
9. Spondonias magifera	52/- -do-	
10. Machilus macarntha	52/- -do-	
11. Mangifera Indica	52/- -do-	

Serial No.

The statement at page 13/c.f. will explain the comparative seinorage rates prevailing in the States of Kerala and Mysore, and therefrom it will be seen that the rates obtaining in Mysore State are higher than the rates in Kerala State. 19.

It is thus clear from Paras that the matchwoods required by M/s. WIMCO are different from the packing woods sanctioned to M/s. Doddanavar Bros. and the Plywoods required by M/s. Hunsur Plywood Works and as such no comparison can be drawn between the matchwoods and Plywoods etc. There is one very important factor which calls for special consideration while fixing the rates of the matchwoods, viz., the Govt. of India has fixed a ceiling on the price of match box. The Co. cannot sell a match box at a higher rate than the one fixed by G.O.I. Excise Dept. If the rate of matchwoods is increased the cost of producing match splints and veneers will naturally increase and the Industry will be forced to increase the price of match box. Another factor which requires special treatment to matchwoods is the fact that the matches are the need of the common man, whereas 20.

Serial No.

Plywoods and other wood based products are not so essential for the common man. If the price of match box increases the common man will suffer whereas in the case of increase in the cost of Plywoods etc., he will be uneffected. The question of fixing the rates for timber, specially matchwoods, deserves careful consideration, in as much as enormous increase in the rates will not be in keeping with Government's oft-repeated desire to hold the price line.

21. 28.12.62. Recently the Ministry (F) has been pleased to order that sanction may be accorded to the supply of 100 Tons of Matchwood Species to M/s Companhia Fofereira De Goa Ltd at the rate of Rs 75/ per ton on adhoc basis subject to the condition that the Company should agree to pay any higher rate that may be fixed by Govt later, and F.D having agreed to this the G.O. in this behalf is under issue separately. But we have to keep in mind while fixing the rate for Wimco, that in this recently ordered case it is a question of ~~revision of the~~ fixing the ~~existing~~ rates ~~only where as the~~ for the first time only for a limited quantity where as in the case of Wimco it is a question of revision of the rates only from 1.1.63. the quantity being already earmarked. A decision has now to be taken

Note.—Contn. Sheet

File No. of 196 . Mysore Government Secretariat

Serial No.

~~cost~~ rates that have to be fixed up for Wimco taking all the factors into consideration.

JR

~~D.S~~ 29/12/62

The increase indicated 22. is not much. The industry can reduce the manufacturing cost and maintain the selling the rate of matches as it is now.

Secy.

29.12.

Secy.)

Effect is finally put for kind perusal and orders

29/12/62

23.

AGRICULTURE & FOREST SECRETARIAT GOVERNMENT OF MYSORE 691 29 DEC 1962

M (Forests) A meeting of the following may be convened on 4-1-63 to revise the rates in all the cases which are due

(1) S AFF
(2) D.S AFF
(3) C.C.F.
(4) S. Finance
(5) S. 9 + C.

BR 31/12/62

24.

OFFICE OF THE MINISTER FOR FORESTS & FINANCE No. F. 2317 29 DEC 1962 BANGALORE

(cat II A!!)

P.S.

R.S. (Forests)

Mysore Government Secretariat

File No. of 196 AFD 86 FDP 62

[App. F. III 2

Serial No.

25. Ref. page 24/n.f.

D.F.A. is sated.

2.1.63.

(26) Issue today

2/1/63

Issued on 2 JAN 1963

2/1

27. Ref. page 16/CF.

A comparative Statement of States as sanctioned or offered by different Industries may be sent to all the officers who are invited to attend the meeting on 4-1-63. D.F.A is sated.

3.1.63.

(28) Issue today.

3/1/63

Issued on 3 JAN 1963

3/1

Note.—Contn. Sheet

13

File No. AFD 86 FDF 62 of 196

Mysore Government Secretariat

Serial No.

Ref. para 24/n.t. — 29.

Proceedings of the meeting held in the chambers of Min (F&F) on 4.1.63 is submd (Flagged A) for favour of approval.

5.1.63.

~~Of the Proceedings~~

The draft Proceedings of the meeting held on 4.1.63 is put up for approval. ~~for the approval of the Minister~~ — 30

6/1/63

(31)

7.1

V. M. LINGIAH,
Deputy Secretary,
Agriculture and Forest Department.

(32)

V. C. HOMBALATH,
Secretary to Government,
Agriculture & Forest Department.

(33)

B. RACHAIAH,
Minister for Forests,
Fisheries and Sericulture.

SAIJ

XXX

18/1/63

DEPUTY SECRETARY TO GOVT. AGRICULTURE & FOREST DEPTT. NO. 105 7 - JAN 1963

AGRICULTURE & FOREST SECRETARY GOVERNMENT OF MYSORE 90 7 JAN 1963

THE MINISTER FOR FORESTS No. 78/62 15 JAN 1963

AGRICULTURE & FOREST SECRETARY GOVERNMENT OF MYSORE 16 JAN 1963

WD-010154—GPB—PZS—8,00,000—1-10-61

86 Copies -

14

PROCEEDINGS of the meeting held in the chambers of the Minister for Forests & Fisheries on 4-1-1963 at 11 A.M. to discuss the issue relating to the enhancement of rates of matchwoods and plywoods.

PRESENT:

The Minister for Forests & Fisheries
The Secretary to Govt., A&F Dept.
The Conservator of Forests in Mysore, B'lore.
The Additional Finance Secy.
The Deputy Secy. to Govt., A&F Dept.
The Under Secy. to Govt., C&I Dept.
The Under Secy. to Govt., A&F Dept.

34) During the last meeting held on 30-10-1962 in the chambers of the Minister for Forests & Fisheries when the representatives of the Companies were also present, it had been decided that the representatives of the Companies may be requested to indicate to what extent the existing rates can be enhanced and they had agreed to send up proposals after consulting their Companies. The rates offered by the Company were indicated and put up at to-day's meeting in the form of a comparative statement and this was perused at the outset.

35) The Minister for Forests was pleased to enquire as to why the rates differ from place to place with regard to the same species and in what way we can adopt a uniform procedure while revising these rates. The Chief Conservator of Forests suggested that the rates recommended by him for revision were based on a rational system which involved taking into consideration the lead from the forest, the transport facilities available and the rate of extraction etc. and he added that the different rates had been given to the Companies at different times keeping this in view. He also explained that the matchwood industry stood on a separate footing from the plywoods and packing case industries because there was a ceiling limit for the sale of matches fixed by the Government of

....2

India and any increase in the rate of the raw material may rebound in the fixing of the ceiling limit. The Under Secretary, C&I Dept. also concurred with this view and said that comparison between the match industry and the plywood industry should not be made while fixing the rates. It was agreed that the rate of the match industry (WIMCO) may be taken on a separate footing. The Minister for Forests said that by giving monopoly to these big industries, we are depriving the other small industries dealing with matchwoods to get their requirements which are nearly a dozen in number. The Chief Conservator of Forests represented that these industries ~~will~~ have come up only of late and our commitments to the WIMCO being made earlier, so we have to fufil the obligations to the Company. He also said that these smaller match industries may not require much raw material and we will be in a position to supply them with the raw materials without any trouble from unexplored areas.

36) After discussions, it was decided that the following rates may be fixed in respect of ~~the~~ each of the Companies noted below:-

(37) 1. <u>Western India Match Co., Bombay:</u> (WIMCO)

Since according to the existing ~~agreement~~ orders, the rates are liable to be enhanced from 1-1-1963, it was decided that in respect of the ~~under mentioned~~ species which have been allotted to the Company (in the old areas of North Kanara & South Kanara) from time to time, the rate may be enhanced uniformly by 20% over the existing rates in all the areas allotted to this Company. It was also decided that 2 species viz: i) Evodia roxburghiana and ii) Lophopetalum wightianum, for which no rates have been offered to them so far, may be reserved for other match industries and this need not be given to M/s. WIMCO. It was also decided that the rates now fixed

16

may continue for a period of 3 years from 1-1-1963 in the areas old and new which has already been given to the Company for extraction, Government however reserving the right to revise the said rate even earlier if circumstances so warrant in such a way favourable to Government.

38) 2. M/s. Mysore Commercial Union,(P) Ltd., Bangalore

Since this Company has not offered so far their opinion regarding the quantum of increase in the rates, it is decided that the existing rates may be increased by 25% from 1-4-1962 (except in the case of ~~Sl.No. 21~~ (Dipterocarpus indicus) for which the Company should pay the same rate as has been given to M/s. Hunsur Plywood Works for the same species viz: Rs.75/-per ton) in respect of forests areas allotted in Sagar District and from 30-1-1963 in respect of forest areas allotted in Hassan District in which areas they are extracting now under the existing orders of Government. The enhanced rates will be in force for a period of 3 years from the dates the revision falls due viz: from 1-4-1962 in the case of Sagar Forest areas, from 30-1-1963 in the case of Hassan Forest area

39) 3. Indian Plywood Mfg.Co.(P) Ltd.,Dandeli:

This Company has offered an overall 10% increase in respect of ~~inferior varieties of~~ lower class plywoods. ~~and~~ With regard to superior varieties the rates ~~are~~ fixed are ~~on~~ the current market rates plus 20% for selection of ~~logs~~ trees or 10% for selection of ~~trees~~ logs. It was decided that so far as the superior species for which the latter condition

...4

is prevailing, ~~and~~ the same may be continued even now. But with regard to the species for which they have offered 10% enhancement, it was decided that it should be increased by 25% over the existing rates except in the case of ~~species which have been~~ given to M/s. Doddannavar Bros. in which case the rates will be as in the case fixed for M/s Doddannavar Bros. These rates also will be in force for a period of 3 years from 1-1-1963 subject to the condition that Government may enhance the rates even earlier if circumstances so warrant and in a manner ~~to the~~ advantageous ~~of~~ to ~~the~~ Government.

(X) Case of certain species which are common to those recently

40) 4. Hunsur Plywood Works:

Regarding M/s. Hunsur Plywood Works, the concession rates asked for by the Company in respect of the species required by them was taken into consideration. It was felt that the rate offered viz: Rs. 70/- per ton was fairly good when compared to the existing rates which ~~with~~ the other Companies were enjoying and the ~~proposed~~ rates which they had now proposed for increase. ~~the said Company had now given~~. The Chief Conservator of Forests indicated that he had suggested a ~~still~~ higher rate to this Company, because the distance of the Factory ~~taking into consideration the lead~~ from the forest is rather too short. ~~etc. which factory will have to be taken into consideration~~. After a good deal of discussion, it was decided that since this Company stands on ~~in~~ the same footing as that of Indian Plywood Mfg. Co., a ~~that the~~ rate of Rs.75/- per ton may be accepted in respect of the following species:-

1. Acrocarpus Fraxinifolias
2. Dipterocarpus indicus, &
3. Vateria indica.

Regarding the other three species required by the Co., viz:-

1. Calophyllum tomentosum(Surlhonne-Poona),
2. Cedrela toona (Red Cedar)
3. Dichopsis elliptica (Pali pulla)

....5

~~required by the Company,~~ it was decided that the rate should be fixed on the basis of current market rate plus 20% for selection of logs or 10% for selection of trees as in the case of Indian Plywood Mfg.Co.Ltd. The period in this case also ~~being~~ may be fixed for a period of 3 years with the usual ~~being~~ clause which has been agreed to in ~~xxxx~~ the case of other Companies ~~premissable of the~~ permitting the rates being revised earlier. ~~being inserted.~~ It was also decided that

41) // The increase of 20% in the rates for *

42) // Lastly, the case of ~~letter by~~ M/s. Mysore Wood ~~Industr~~ Works, requesting for certain species in the Coorg area was considered. The Chief Conservator of Forests was asked to indicate whether any species ~~the~~ out of the ~~species given~~ required by the said Company ~~whether it was possible to~~ can be allot to these new Industries, and also the rates at which the species ~~it~~ can be given. The Chief Conservator of Forests stated that since he has ~~xxxxx~~ received the representation only this morning (i.e. on 4.1.63) he would send a report ~~reply~~ to enable Government to take a decision in this matter. ~~It was therefore agreed~~ It was decided that A decision in this case may be taken on receipt of the report from the C.C.F.

JSR
6/1/63

*M/S W.I.M.CO will have to be worked up on the average of the existing rates of timber species, sanctioned in the old and additional areas and calculated to the nearest rupee. The increase of 25% in the rates for M/S Mysore Commercial Union and the Indian Plywood Co. will be on the existing rates of timber and calculated to the nearest rupee.

5.1.62
RN.
4/1/62

Mysore Government Secretariat

File No. AFD 86 FDP 62 of 196

[App. F. III 2

Serial No.

43 ~~34~~ Ref. paras 30-33/n.f.

44 ~~35~~ The Proceedings of the meeting held on 4.1.63 may be forwarded to all concerned.

23/CF.

45 ~~36~~ DFA is sent.

MA 19.1.63.

46 (~~37~~) Issue.

JR 21/1/63

Issued on 23 JAN 1963

23/1

Note.—Contn. Sheet

Subject:- Supply of Matchwoods to M/S W.I.M. Co.

Mysore Government Secretariat

File No. AFD 86 FDP 62 ~~(Supl)~~ of 196

[App. F. III 2

Serial No.	
~~38~~ 47	1/c. D. No: 4955 — Letter No: 11-14/62 FD dt: 10.12.62 from GOI, M/FD & Agre.
48 ~~39~~	2/c. D. No: 10071 — Telegram dt: 17.12.62 from M/S WIM Co.
49 ~~40~~	The main file on the subject is in action. The proceedings of the meeting held on 4.1.63 in the chambers of Min (F&F) are under issue.
50 ~~41~~	If approved, CCF may be asked for remarks on G.O.I's letter of 11.12.62 (P-1/CF).
51 ~~42~~	3/c. DFA is sealed.

J.M.
22.12.63.

52 ~~43~~ Issue

22/1

23/1/63

Issued on 24 JAN 1963

24/1

Note.—Contn. Sheet

Matchwoods for M/s W.I.M. Co.
Revision of —

Mysore Government Secretariat

File No. AFD 86 FD of 1962

[App. F. III 2

Serial No.

(58)

1558/W.2

According to the terms of the agreement entered into with the Company, certain areas, have been leased out to the said Company for exploitation of certain species of wood. The lease period is still subsisting. Hence, the question of calling for tenders does not arise. The period for which the previous rates were fixed is over and hence the present question is only one of revising the previous rates as contemplated in the agreement. As it was felt that the existing rates were low, the party was required to intimate what higher rates they would offer having regard to the alround increase of materials since the date of fixation of the existing rates. ~~However,~~ Having regard to the rates offered by this and other Companies using soft woods like the present Company, the rates for this Company were fixed at a meeting presided over by the Forest Minister when I was also present. Having regard to all relevant factors, it was then felt that the rates now fixed were very fair as can be made out from the proceedings of the meeting placed below. The same may kindly be agreed to.

Finance Minister)

19/2

M. VENKATARAJ URS,
Addl. Finance Secretary.

20/2/63

21/2

21/2

25/2/63

Typed
23/2

AFS 845

OFFICE OF THE MINISTER FOR FINANCE
No. 2450
20 FEB 1963
BANGALORE

AFD

MYSORE GOVT. SECRETARIAT
25 FEB 1963
FINANCIAL SECTION

Note.—Contd. Sheet

21

File No. RFD 86 FDP 62 of 196

Mysore Government Secretariat

Serial No. 53.

At the meeting held in the chambers of Sri (F+F) on 4.1.63, it was decided that the rates of timber to be exploited by M/S WIMCO should be increased by 20 %, vide paras 37441/ng. Accordingly, draft G.O. is submitted for approval. The case papers may be marked to F.D. for concurrence, before issue of the G.O.

XP-27/CF.

30.1.63.

(54) 7.70. Concurrence.

Sri M. Veeraraje Urs
F.D.
A.F.S.

31/1

BR
31/1/63

OFFICE OF THE ADDL. FINANCE SECRETARY
No. 845

(55) May be agreed to

31/1

M. VEERARAJ URS,
Addl. Finance Secretary

OFFICE OF THE MINISTER FOR FINANCE
No. 1513
1 FEB 1963
BANGALORE.

7.n)

(56) I agree.

31/1/63

(57) Forest Department may consider whether it is correct to fix rates by notification instead of fixing the rates.

31/1/63

Matchwoods for M/s W.I.M. Co.
Revision of -

23

Mysore Government Secretariat

File No. AED 86 FD P of 196 62

Serial No.

Submitted.
Please see paras 54 to 58 of the proceedings. F.D. having agreed, the G.O. at pages 29-31 (e.s.) may now issue.

59

27-2-63
28/2

Draft G.O. may be approved.
This is to accord sanction for the revision of rates in respect of Matchwoods extracted by M/s. Wimco
Wilh effect from 1.1.1963.
F.D. has agreed.

60

No. 1319
2 MAR 1963

AGRICULTURE & FOREST SECRETARIAT
1100
4 - MAR 1963
GOVERNMENT OF MYSORE

JR
1/3/63

D.S.

61

Secy. for Chief Secy.

V. M. LEWIS
Deputy Secretary

62

Minister for Forests

V. C. HONBALAYYA,
Secretary to Government,
Agriculture & Forest Departments.

Approved (63)
JR 1/3/63

8.3.

OFFICE OF THE MINISTER FOR FORESTS &
No. F 620/63
7 MAR 1963
BANGALORE.

SA + F)

Done (64)
JR
8/3/63

G.O. for Finance Communication
3605 of 15-3-63

65

WD-810154—GPB—PZS—8,00,000—1-10-61

ISSUED
15-3-63

G.O. issued on 18 MAR 1963

AFD 86 FDP 62

34/c

66. D. No: 1008 — Letter No: 11-14/62-FD dt. 22-1-63 from R.D.L, M/FD & Agr.

67. If approved, a copy of the PWD may be sent to CCF for necessary action.

35/c

68. DFA is sealed.

Inst.
23.4.63.

(69) Issue
JR
25/4/63

Sub.

Issued on 27/4/63.

37/CF

70. D. No: 6674 — CCF's letter No: A2(B)2-362/WHC/63-64 dt. 20.8.63.

71. The rates fixed for different timber species, conceded to WIM Co., may kindly be perused in the statement at Page 38/CF. The rates have been worked out in accordance with the G.O. dt. 15.3.63 at P. 24/CF. Copy of the agreement may be availed from the C.C.F.

SECRETARY TO GOVT.
NO. 5780
28 AUG 1963
AGRICULTURE & FOREST DEPTT.

Inst.
24.8.63 JR 24/8

D.S.

(72) JR
28/8/63

(73) 29/8
JR
29/8/63

AFD 86 FDP 62.

25

39/CF.

D. No: 7229 – Letter dated 26.9.63 from M/S W.I.M. Co. (74

M/S. W.I.M. Co. apprehend that the Indian Plywood Co. have been allowed to extract timber in forest areas, which already stand committed to M/S. W.I.M. Co, from Sirsi (N. Kanara) to Hosanagar (Shimoga). This representation is perhaps against the orders issued in G.O. No: AFD 49 THS 57 dated 23.7.63 (Flag W), in regard to the establishment of a Veneering Unit by M/S Indian Plywood Co. The timber species that have been conceded for the Veneering Unit are those already given for Plywood Factory at Dandeli but "subject to other prior commitments". This means that the forest authorities would allow extract of ~~on~~ trees by the I.P.W. Co. only after safe-guarding the interests of the Industries to whom commitments have already been made and would also avoid collision & over-lapping in one forest area. However, if approved, C.C.F may be asked to offer remarks on the PUD.

43/CF.

D.F.A. is Sub'd. (76

1.10.1963. 2 4/10

Issues (77)

BR

ISSUED 7/10/63

Date 8.X.1963

C.H

Pl discuss

5/10/63

S/p Kumar

Mysore Government Secretariat

File No. AFD 86 FDP 62 of 196 [App. F. III 2

Serial No.

44/C

76. D. No: 8.F.A — Letter No: 11-14/62-FD, dt. 1.10.63, from G.O.I.

79. A copy of G.O.I's letter of 22.1.63 (P. 34/C), referred to in PUD, has been sent to CCF for necessary action, vide G.O. at page 35/CF. If approved, G.O.I. may be informed of the action taken and the CCF may be asked to indicate the action taken by him in this behalf. — PP 45-46/CF.

80. Two draft letters are submd. for approval.

15.11.63.

Initial. 8.X.63.

3/10/63

(81) Issue

BR 10/10/63

ISSUED Date 15/10/ 1963

82 Ref. Page 46/CF. Reminder to CCF is submd.

5.1.64.

Initial. 4.12.63.

(83) Issue

BR 4/12/63

ISSUED Date 5/12/ 1963

Note.—Contn. Sheet

961

Timber for M/S W.I.M. Co — Supply of 27

File No. AFD 86 FDP 62 of 196

Mysore Government Secretariat

Serial No.

58/c

D. No. 1857 FA — Letter dt. 19.4.65 from M/S W.I.M. Co.

"Sri Harishwar Iyer is meeting me on 29.4.64 at 4 P.M. in connection with assessing matchwood supply positions. C.C.F may be requested to join us, bringing whatever information he can."

Secy. A & F.
21.4.65. 84.

According draft letter to CCF with F.C. is sub. for signature. 85. × 58/CF.

Int.
22.4.65.

Issue (86)
BR
22/4/65
(T. S. RAMAIYA),
Under Secretary to Government,
Agriculture & Forest Department.

ISSUED
Date 23/4/65

The case papers may be sub. to Secy. A & F. in reference to Para 84/n.t. 87.

Int.
26.4.65.

PA to Secy. Puttaiah 26/4/65 AS (A/C) 88.

Note Continuation Sheet

Subject: Timber for M/S W.I.M. Co. File No. 86 FD 062

Reference and markings	Notes and Orders.	Para Numbers
	89. ~~The~~ Sri Harihara Iyer met me and had discussions of general nature when CCF was also present. He desires a few more species of soft wood which would not be useful to other modes hence be given to WIMCO. He wanted rates in respect of species ~~and~~ allotted to various industries he mentioned. He either into letter another letter to Govt in Sept 64 indicating the new material requirements and requested GOI to kept it in mind while taking up appreciation work on extensive scale.	
8440		
65/1/5/65		
1/5/65		
	Ref. Para supra.	
	90. The letter cited by the Co. is perhaps the one dated 1.10.64, a copy of which may kindly be perused at PP 47-50/CF. In that letter the Co. states that its present requirement of Match-wood is of the order of 36,000 tons per year and it would go upto 54,000 tons with the increase in their production. The period of lease of match-woods of this Co. is upto 31.12.67. The Co. requests that it may be	

DEPUTY SECRETARY TO GOVT. NO. 2143 1 MAY 1965 AGRICULTURE & FOREST DEPTT.

Signature spaces

Note Continuation Sheet

Subject Timbers — M/S WIM Co.

File No. AFD 86 FDP 62

WD 014600—GEB—8,000,000—5-12-64

Reference and markings	Notes and Orders.	Para Numbers
	extended upto 1980.	
	The above request of the Co. may be considered at the time of revision of its rates, which is to take place ~~falls due~~ from 1.1.1966. In the meantime, C.C.F. may be asked to offer remarks on the request of the Co. Draft letter is submd. for approval.	91.
61/CF.		
	Draft letter is submd. for perusal before issue	92
	1.5.65.	
	DS) VPuttaiah 10/5/65 as (P/C)	
	Issue (93)	
	11/5/65	
	9/C Secretary to Govt., Agriculture & Forest Department.	
	ISSUED Date 15.5.65 1965. mg 13/5	
	66/CF.	
	D. No: 2081 - Letter dt. 27.4.65 from M/S W.I.M. Co.	
	CCF has already been asked to offer remarks on the request made in PWD, vide G.L. of 15.5.65 at P- 61/CF. CCF's reply may be awaited.	94.
AFD.33 FDP61		
	20.5.65. mg 2/6/66	

DEPUTY SECRETARY TO GOVT. NO 11 MAY 1965 561H AGRICULTURE & FOREST DEPTT.

Stitching space

Matchwoods for M/S WIMCO — revision of rates. 30

File No. 86 FDP 62 of 196

Mysore Government Secretariat

Serial No. 95

Page 66 of may please be seen. The request of M/S Wimco is to extend the period of the revised prices of matchwood fixed in G.O. No. AF 86 FDP 62 d 15-3-63 upto 31-12-67 instead of upto 31-12-65. This ~~has~~ does not seem to have been referred to C.C.F. His remarks may now be called for the specific request. (A)

8/10/65

96

(A) make done urgently. Why was no action taken on the Company's letter since April 65?

8/x/65

(SYED BASHEER AHMED)
Deputy Secretary to Government,
Agriculture and Forest Department

DEPUTY SECRETARY TO GOVT. NO. 8 OCT 1965 AGRICULTURE & FOREST DEPTT.

11/10/65

97 P69/CF.

Draft is put up calling for remarks on the petition of 27-4-65 received from M/S. WIMCO.

14/x

Issue today

98

16/x.

18/10/65

Issued 19/10/65

WD-010154—GDB—PZS—8,00,000—1-10-61

Serial No.

Lr. No. A2(B) - 2 - 362/ WMC /63-64 dated 19-10-65 from the C.C.F

99 Please peruse PP 47, 66 & 73 of -

As per Government Order No.AFD 86 FDP 62 dated 15-3-1963 the rates of match weeds to be extracted by M/s WIMCO from the areas of N. Kanara and S. Kanara and also from the additional areas allotted was increase by 20% with effect from 1-1-1963 to be effective for 3 years. The Government reserved the right to revise these rates even earlier than 31-12-1965 if circumstance so warranted. M/s WIMCO have requested that these rates may be allowed to be further continued for a period of 2 years upto 31-12-1967.

100 The revised rates so fixed and the species involved are as shown below:-

1.	Bombax Malabaricum	
	33" to 47" girth	Rs. 57.00
	48" to 120" girth	60.00
2.	Ailanthus excelsa	~~[illegible]~~ 56.00
3.	-do- malabaricum	56.00
4.	Abstonia scholaris	54.00
5.	Canaridum strictum	54.00
6.	Eleccarpus Tuberculatas	54.00
7.	Symploces spicata	54.00
8.	Spondias mangifera	53.00
9.	Machiles macrantha	54.00
10.	Mangifera indica	
	33" to 48" girth	54.00
	49" to 72" girth	57.00
	73" and upto 120"	60.00
11.	Hymeno_dictyon	53.00

101 There has been considerable increase in demand for softwoods, from Packing Case Makers, Slate Frame manufacturers and even Plywood and Pulp Industries of late. This demand natually raises the prices and in the present difficult financial situation, Government would like to take advantages of increased rates being adopted for all as far as possible. The C.C.F. has

Note.—Contn. Sheet

Reference and markings	Notes and Orders	Para Numbers
	not offered any remarks on the question of revision of rates, except to state that this may be discussed by Government with the representatives of M/s WIMCO and arrive at a decision. This is for orders.	
	The second request of the Company is regarding the extention of the lease period of 30 years which will expire on 31-12-1967. for another period upto 31-12-1980. The C.C.F. has recommended this request. This question however need not be decided now and may be taken up after April 1967. The Government Order dated 15-3-1963 also had ordered the C.C.F. to send proposals on this by ~~January~~ June 1967 only. The extension of the period of lease requires examinations with reference to availability and extent of species and may be examined in detail subsequently.	102
A/p. 32 c/	On the suggestion of the Company, that more softwood plantations should be taken up for growth, the C.C.F. has stated that 9652 acres have been planted upto 1965 as follows:— First 5 year plan period 430 acres. Second -do- 7622 " Third -do- (During four years only) 16000 "	103
	He further states that the Department will take up the question of raising matchwood plantations on a larger scale if Govt. provide adequate funds.	104
	The additional species which M/s WIMCO are interested and which are found in this State	105

Stitching space

Note Continuation Sheet Timber

Subject Revision of rates for M/s Wimco for Soft woods.

AFD 86:FD 62

File No

WD 014899—GPB—8,00,000—11-8-65

Reference and markings	Notes and Orders	Para Numbers
	as the following:-	
	1 Anthocephalus cadamba 2 Bombax insigne 3 Evodia roxboxburghiana 4 Gyrocarpus americanus 5 sterculia villosa 6 Trewia nudiflora 7 Elaeocarpus turbinatus 8 Eleocarpus oblongus 9 Garuga pinnata 10 Saccopetarum tomentosum 11 Celastrous.	
	The question of releasing these species may also be considered and the rates to be charged for them. As regards Dysoxylum malabaricum(White cedar), Lophopetalum Wightianum(Bilihebbalasu), and Kydia calycina (Bende), ~~are~~ which though available, the C.C.F. is not in favour of releasing them as they are required for Defence, manufacture of Artificial Limbs photo frames and prodution of pulp purposes respectively.	106
	6.12.65. M. W. WINSTON, Under Secretary to Government, Agriculture and Forest Department.	
	The request of the WIMCO for extending the lease period and the proposal of the CCF to revise the rates for several species conceded to the Company may be decided at a meeting to be held in the chambers of the Minister for Forests when the Secy. A&F., CCF, representative of the WIMCO, representative of C&I Department and a representative of FD will be requested to attend the meeting.	107

x P. 66-67 ct

DEPUTY SECRETARY TO GOVT. AGRICULTURE & FOREST DEPTT. NO. 14268 7 DEC 1965

P-73 ct

Note Continuation Sheet

AFD 86 FDP 62

Subject.....Revision of timber rates for M/s WIMCO for softwoods.

File No .....

Reference and markings	Notes and Orders	Para Numbers
	A suitable date and time may be fixed for the meeting.	108
	(SYED BASHEER AHMED) 8/12/65 *Deputy Secretary to Government,* *Agriculture and Forest Department.*	
	Secy. A&F M(Forests) [No action has been taken on the letter of the company since April 65. The implication of the case worker. Supt & US may be called for and such a lapse warrants serious disciplinary action].	(109)
	A suitable date & time may kindly be fixed for a meeting Minister Forests 19/12/65 G. S. SRINIVASAN Secy., Agri. & Forest Dept.	(110)
	This may be discussed on 23rd 12-65 at 10 AM. 16/12/65 S. A. & F.	(111)
	P.S. to Min. Forest informed me over the phone that the meeting will be at 10.30 A.M. on 23.12.65. Notice being issued in File No 79FDP61. 18.12.65	(112)

DEPUTY SECRETARY TO GOVT. NO 8 DEC 1965 AGRICULTURE & FOREST DEPTT.
AGRICULTURE & FOREST SECT. No 9 DEC 1965 GOVERNMENT OF MYSORE
OFFICE OF THE MINISTER FOR FOREST No 13 DEC 1965 BANGALORE
OFFICE OF THE MINISTER FOR FOREST & FINANCE No 25 DEC 1965 BANGALORE
AGRICULTURE & FOREST SECT. No 7648 16 DEC 1965
MINISTER FOR FOREST & FINANCE No 27 JAN 1966 BANGALORE

35

Note Continuation Sheet

Subject: Raw materials to M/s Wimco

File No: AFD. 86 FDP 62

WD 014899—GPB—8,00,000—11-8-65

Reference and markings	Notes and Orders	Para Numbers
	This is sent herewith as desired on phone	(113)
	22/2/66 M. W. [illegible]	
	PS/Min for Forest	
	Several representations were made to Govt by the small match wood dealers in the State that they are not getting timber for their match splints at present. In view of the commitment made to Wimco throughout the Estate. The question of deleting addtn areas conceded in 1960 may be examined to enable the local industries to get soft wood particularly in Shimoga and ~~Mysore~~ Coorg circle	(114)
F. 332/66	S. APF) 28/2/66	BR 27/2/66
		B. RACHAIAH. Minister for Forests, Reserves and Sericulture.
	Note Papers [illegible] 1/3/66	(115)
	Remind as directed. 3/3	(116)
	Rem A.83 of 1966 put back	(117)
	4/3/66	

No. 1140 28 FEB 1966

SECRETARY TO GOVT. NO 2128 1 MAR 1966

ISSUED Date 7/3/ 1966

Matchwood for M/s. WIMCO, Bombay — Revision of rates.

36

Note Continuation Sheet

Subject.....

File No. AFD 86 FDP 62.

Reference and markings	Notes and Orders	Para Numbers
	Resubmitted with reference to para 117 supra. (119)	
	7/3/66. Remind T.A. on 1-4-66 for the report on p. 85 cf. (119)	
	26/3/66	
	Do. letter No. A2(B)-2-362/WIMC/63 dt. 12-4-66 from the C.C.F. (D.No. 1971/FA/66)	
	Please see the report of the C.C.F on pp. 89-91 cf.	
p. 29 cf	In G.O. No.AFD 86 FDP 62 dated 15-3-1963 rates for the species conceded to M/s WIMCO was increased by 20% from 1-1-1963 for a period of 3 years. The Species and the rates so fixed was to be reported by the C.C.F. The rates so fixed by the C.C.F. for the several species conceded to M/s WIMCO are at P. 38 CF. These rates were due for revision with effect from 1-1-1966 and the Company is exploiting the species on the understanding that they will pay at the revised rates fixed by Government with effect from 1-1-1966.	120
	The lease period according to the previous orders issued on the subject is upto 31-12-1967. In the meantime, the Company has requested that the lease period may be extended even from now as they have to regularise the services of certain employees who are continuing on a temporary basis at present.	121

Stitching space

Note Continuation Sheet

Subject..... File No.....

WD 014899—GPB—8,00,000—11-8-56

Reference and markings	Notes and Orders	Para Numbers
	There can be no objection for this and according to the decision taken on 31-12-1965, the period of lease may be for a period of 20 years with effect from 1-1-1966(the due date for revision of rates) i.e., upto 31-12-1985. The C.C.F. is however of the opinion that the lease period should be 20 years from 1-1-1968 (-ie., upto 31-12-1987). ~~Thxxxxxxx~~ There will be no legal difficulty at all to extend the lease for 20 years from 1-1-1966 only. The only thing we are doing is to extend the lease period prior to its expiry for which there shall be no objection. This will be also in consonance with the decisions already taken in the matter of extension of leases.	122
	An important point for decision has however arisen in this case which needs decision before final orders on rates and lease period is issued. Certain match-splint manufacturers have represented to Government through the Mysore Match Splints and Veneers Manufacturers Association, stating that they should be assured of some supply of softwoods, particularly from the forest areas of Coorg, so that they may not be handicapped in running their industry. A report in the matter was called for from the C.C.F, but his reply is not yet received. An advance copy of the remarks of the Conservator of Forests, Coorg sent to the C.C.F. is at PP 19- 21 C.F. wherein it is suggested that some specified areas and species may be	123

vide the L.F

Pl 11 x 25 f / LF

Note Continuation Sheet

Subject.....

AFD. 86 FDP. 62
File No.....

WD 014899—GPB—8,00,000—11-8-66

Reference and markings	Notes and Orders	Para Numbers
	reserved for the Match - Splints Factories, and also allot lops and tops, left over by other industries to these Match Splint Manufacturers. The C.C.F. has however stated in this file that Government have issued orders reserving the following four species of matchwoods exclusively for meeting the requirements of Match Splint Factories in the Forest Division of Shimoga Circle (Bhadravathi, Tarikere, Hassan and Chickmagalur Divisions).	124
	1. Eleocarpus tuberculatus 2. Alstonia schol aris 3. Evodia Roxburjiana 4. Simplicos Spicata.	
	He has suggested that the above 4 species along with ~~other~~ Hymenodictyon may be reserved in the areas worked by the Company in Kollegal, Mysore, Chamarajanagar, Hunsur and Mercara Divisions also.	125
	This may require to be discussed at a meeting to be called for with the following:-	126
	Secy. to Govt. A&FD.; Secy. to Govt. F.D.; Secy. to Govt. G&I Dept.; C.C.F., C.F. Coorg.	
	M. W. WINSTON; Under Secretary to Government Agriculture and Forest Department 576166 (SYED BASHEER AHMED) Deputy Secretary to Government, Agriculture and Forest Department	127

[Such a decision has been already taken, on 28-4-66 - vide (N) item V.]

para 4 on p 90

DEPUTY SECRETARY TO GOVT. NO. 8209 1 JUN 1966 AGRICULTURE & FOREST DEPT.

AGRICULTURE & FOREST DEPT. No. 4221 15 JUN 1966 GOVERNMENT OF MYSORE

Secy

39

Note Continuation Sheet

Subject: Raw Materials to Wimco - File No.: AFD 86 FDP 62

Reference and markings	Notes and Orders	Para Numbers
6209/7A. 4221	Minister was pleased to mention that Wimco should not be given wood for matchwood ~~for~~ in the entire State but areas should be clearly demarcated and allotted to them. Hence before renewal of the contract with Wimco this aspect has to be considered carefully. If approved, Minister ~~can~~ may be pleased to convene a meeting with officers concerned where this can be discussed and decision arrived at	(128)
	Minister Forests	20/6/66 G. S. SRINIVASAN, Secy., Agri. & Forest Dept.
	This may be discussed on 14/7/66 at 12 noon	(129)
	S. A. F.	BR 23/6/66 B. RACHAIAH, Minister for Forests, Fisheries and Sericulture.
	(132) Draft notice and the notes for the above meeting have been prepared and put up separately in file no. AFD 18 FDP 66. Copy of the same will be added to this also. Draft letter to the WIMCO put up for approval.	23/6
	(130) Include in Notice for 14-7-66	23/6/66

Initialing space

OFFICE OF THE MINISTER FOR FORESTS & FISHERIES No. F 1062 20 JUN 1966 BANGALORE.

AGRICULTURE & FORESTS 23 JUN 1966 DEPARTMENT OF

ISSUED

M. G. S.

Subject: Raw materials to M/s. WIMCO. — 40

File No. AFD 86 FDP62

WD 01050—GPB—8,00,000 13-12-65

Please see the proceedings of the meeting held in the chambers of the M(Finst) on 14-7-1966 on pp. 127-131 ef. The question of revision of rates and allotment of areas to M/s. WIMCO. as decided at the meeting at 'A' on p. 130 ef has been taken in file on. AFD 120 FDP66 dt. 24-11-1966 (a copy of the GO regarding the same is on pp 133-136 ef.) No further action appears called for on this. May be closed. — B

B B

6/2.

8/2/67

S.P.
8/2.

41 1

Copy of letter No.AFD 8 TMS 57 dated 4th December, 1957 from the Secretary to Government, Agriculture and Forest Department addressed to M/S The Western India Match Company Ltd., Indian Mercantile Chambers, Nicol Road, Ballard Estate, Post Box No.254 Bombay.

Sub:-Matchwood--Sale of--

With reference to the correspondence ending with Shri.Harihara Iyer's letter dated 5th October, 1957 on the subject mentioned above, I am directed to state that the following rates offered by you during the discussions for the species specified there - against are acceptable to Government.

Species	Rates offered by the Co. and accepted by the Government.
Bombax.	Rs1-0-0 per cft. or Rs.50/- per ton (Girth 48" and above)
	Rs.0-15-0 per cft or Rs.46-14-0 per ton (Girth 33" upto and exclusive of 48")
Other Species.	Rs.0-14-0 a cft. or Rs.43-12-0 per ton

Machilus Mercrantha, Ganarium Strictum, Mangifera Indica and any other soft wood species that may be subsequently agreed to by the Government.

The rates accepted subject to the conditions that (a) the rates are operative for a period of five years with effect from 1-1-1958 (b) the xxxxx areas of operation is restricted to North and South Kanara Districts (c) the exploitation of the area is done at the entire cost of the Company under the supervision of the Forest Department (d) the Company accepts the available quantity of matchwood in those areas with a minimum of 2,500/- cft. per year and (e) they are liable to be altered if there is rise in the ceiling price fixed by the Government of India for the matches.

I am also to request you to communicate to Government your acceptance of the conditions at an early date so that steps could be taken to finalise the agreement before the period of exploitation of the area commences. The Chief Conservator of Forests has been requested to prepare the draft Agreement which will of course include all other conditions and terms.

COpy

18.12.62.

Superintendent,
Agriculture and Forest Department

42 2

PROCEEDINGS OF THE GOVERNMENT OF MYSORE

Subject:- Matchwood species for M/S. WIMCO - leasing of -

...

AGRICULTURE & FORESTS DEPARTMENT

G.O.No.AFD 8 TMS 57 dated the 26th March 1960

Read:-

Letter No.Nil dated 2-12-1959 from M/S. Western India Match Co., Ltd.,

O R D E R

M/S. Western India Match Co., Ltd., are for the present extracting four species of matchwood viz Sawar, Gulmav, Kalchup and Mango from the Forests of North and South Kanara Districts. The Firm has now requested that soft wood species may be allocated on priority and distributed on a rational basis between the softwood based industries in consonance with the recommendations of the Central Board of Forestry and that the area of extraction of matchwood allotted to them be extended to cover their accessible areas of Mysore State for the matchwood species subject to existing commitments.

2. Government is pleased to permit M/S. WIMCO to exploit the marginal noted additional softwood species within the areas of North and South Kanara Districts allotted to them for operations at the rates already agreed upon and to exploit all the species which they require in the additional areas in the rest of the State which they prefer and where there are no previous commitments, provided the Firm pays present rates for the species or the rates which Government receives for similar species from the Plywood Industry in the neighbouring areas, Government reserving the rights to accept the rates favourable to them. The Chief Conservator of Forests is requested to decide the additional areas where the Company could be allowed to extract the softwood species and suggest suitable rates for the consideration of Government accordingly.

1. Ailanthus excelsa.
2. Ailanthus malabarica.
3. Alstonia scholaris.
4. Dysoxylum malabaricum.
5. Mimusops tuberculatus.
6. Hydnocarpus roxburghiana.
7. Hopea ponga.
8. Lophopetalum wightianum.
9. Spondias mangifera.
10. Symplocos spicata.

By Order and in the name of the Governor of Mysore,

(K.S.N. Murthy) 26.3.60
Deputy Secretary to Government,
Agriculture & Forest Department.

To

The Chief Conservator of Forests, Bangalore.
The Accountant General, Bangalore, thro' Finance Department.
M/S. Western India Match Co., Ltd.
The Weekly Gazette.

Cnn.26/3/60.

PROCEEDINGS OF THE GOVERNMENT OF MYSORE

Sub: Matchwood species for M/S. WIMCO - Leasing of.

AGRICULTURE & FOREST DEPARTMENT

G.O.No. AFD 8 TMS 57, Dated, Bangalore 23rd May 1960

Read:-

1. Letter No.AFD 8 TMS 57 dated 4-12-57.
2. Letters No.A2(b)93-433/57 dt. 2-12-59, 11-12-59, 8-3-60 and 14-3-60 from the Chief Conservator of Forests, Bangalore
3. Govt. Order No.AFD 8 TMS 57 dated 26-3-1960

ORDER

On the requests from M/s.WIMCO, the Chief Conservator of Forests has forwarded certain recommendations to Government in regard to leasing of matchwood to the Company.

On the recommendations of the Chief Conservator of Forests, Government is pleased to order as follows:-

1. M/S WIMCO should be granted extension in the period of the present lease for a further period of 5 years from 1-1-1963, subject to mutual adjustment of rates after the said date; and also subject to the conditions that terms of lease may be revised even before that period if circumstances so warrant and favourable to Government.

2. The Company should be permitted to extract matchwood to the extent of 1100 tons per year in the areas of Yellapur Kirwatti Forests, already allotted to M/S Hindmatha Industries for extraction of matchwood in as much as M/S Hindmatha Industries have been unable to extract the originally sanctioned quota of 1600 tons of matchwood, the said quota has been reduced to 500 tons vide Govt. Order No.AFD 35 FAC 57 dt. 13-6-1958. This concession to M/S WIMCO will continue until such a time as Hindmatha Industries are able to exploit 1600 tons of matchwood per year in the said area.

3. M/S WIMCO should be charged royalty on Mangifera Indica (Mango) logs extracted by them in the North and South Kanara Forests @ Re.0-15-0 per Cft. or Rs.46/14/- per ton of 50 Cft. for logs of 49" to 72" in girth and @ Re.1/- per Cft. or Rs.50/- per ton of 50 Cft. for logs of 73" to 120" in girth, subject to Company's option as to the girths. This will have retrospective effect from 1-1-1958.

4. The said Company should be permitted to extract the matchwood species from Talakalale (Sharavathi submersion) area. The action of Chief Conservator of Forests in having allowed the Company, to extract the Matchwood in this area, pending Government orders, is also approved.

The extraction of softwood species sanctioned in paragraph 2 and 4 above will be subject to specifications, rates and other terms agreed upon.

By Order and in the name of the
Governor of Mysore,

Sd/-

(K.S.N. Murthy)
Deputy Secretary to Government,
Agriculture & Forest Department

To

1. The Chief Conservator of Forests, Bangalore.
2. The Accountant General, Mysore, Bangalore, through Fin.Dept.
3. The Weekly Gazette (four copies)
4. M/S Western India Match Co., Ballard Estate, P.Box 254, Bombay
5. M/S Hindmatha Industries, Shanti Bhavan, Saptapur Road, Dharwar

DV/20.5.60

45
5

PROCEEDINGS OF THE GOVERNMENT OF MYSORE.

Sub: Matchwoods for M/s Western India Mach Co., Leasing of.

AGRICULTURE & FOREST DEPARTMENT.

G.O.no. AFD 8 TMS 57, Dated, Bangalore 8th November 1960.

Read:

1. Government order No. AFD 8 TMS 57 dated 26-3-60
2. Government order No. AFD 8 TMS 57, dated 23-5-60
3. Government order No. AFD 8 TMS 57 dated 27-8-1960.
4. Letter No. A2(b)93-433/57 dated 10-8-60 from the Chief Conservator of Forests in Mysore, Bangalore

O R D E R

Government directs that M/s W.I.M.Co., should be permitted to extract matchwood species already sanctioned to them vide Government letter of 4-12-57 and Government order 26-3-60 quoted above in the additional areas of Mysore Forests as per following details.

Additional Areas.	Matchwoods.
Belgaum Circle.	
a) Forest Ranges of Yellapur and Kirwatti (which have been allotted for Hindmata Industries)	The species of matchwood sanctioned in Government orders dated 4-12-57 and 26-3-60, to the extent of 1100 tons per year vide Government order of 23-5-1960.
b) Forest Ranges of Khanapur & Nagargali.	The species of matchwood, sanctioned in Government letter of 4-12-57 and Government order of 26-3-60.
Shimoga Circle.	
a) Shimoga Division Bhadravathi Division, Hassan Division, Chikmagalur Division.	The species already sanctioned, excluding the following: 1. Eleacarpus tuberculatus 2. Alstonia scholaris. 3. Evodia roxburghiana. 4. Symplocos spicata.
Sagar Division (other than District Forests and Kans) and Hassan Ghat Forests	The species already sanctioned,
b) Areas assigned to the Mysore Commercial Union viz: Hassan Ghat Forests and District Forests and Kans of Sagar Division.	The said species excluding the species required by the Mysore Commercial Union. In these areas M/s W.I.M.Co., should be allowed to extract matchwoods during the year following that in which the Mysore Commercial Union completes its extraction work.
Coorg Circle.	
) Coorg District, Mysore District, and Kollegal Division.	The sanctioned species to the extent available and subject to the prescriptions of the Working Plans in these areas.

b) Forest areas coming under Kabini River project in Mysore District. — All matchwoods available in the area and acceptable to W.I.M.Co.

M/s Western India Match Co., should exploit the area of Kabini River Project first for all suitable matchwoods, without prejudice to the Department's arranging for other contracts with a view to redeeming all the remaining useful forest growth before the area gets submerged. After the exploitation of this area is completed the W.I.M.Co., may be allowed to extract matchwoods from other areas in the Mysore District.

3. Two more species of matchwood viz: Lophopetalum Wightianum and Evodia Roxburghiana should be deleted from the list of matchwood species sanctioned for M/s W.I.M.Co., in the Government order No. AFD 8 TMS 57, dated 26-3-60, pending further consideration of the rates at which these species can be made available.

4. In so far as extraction of the additional species of Matchwood in North and South Kanara Districts is concerned, the rates of royalty sanctioned in Government letter of 4-12-1957 and Government order of 26-3-60 should hold good, i.e. at Rs. 43.75 nPs per ton.

5. As regards the rates for extraction in the additional areas in the Forest Circles of Belgaum, Shimoga and Coorg, the additional areas are divided into two supply Zones viz: Northern zone for Belgaum (exclusive of North Kanara) and the Southern zone for Shimoga and Coorg (exclusive of South Kanara). The following royalty rates for the matchwood species, sanctioned for W.I.M.Co., should be charged in the North and Southern Zones, specifications applicable being the same as exist at present for North and South Kanara Districts.

Sl. No.	Matchwood.	Girth specifications.	Rate per ton of 50 Cft for Northern zone (exclusive of N.Kanara) Rs.	Rate per ton 50 Cft for Southern zone (exclusive of S,Kanara.) Rs.
1	2	3	4	5
1.	Ailanthus excelsa	Girth 33" to 120" and length 6'6" and above.	50/-	50/-
2.	Ailanthus malabarica (Only such trees which have stopped exuding resin after tapping it completely.	-do-	50/-	50/-
3.	Alstonia scholaris.	-do-	43.75	50/-
4.	Bombax malabaricum	-do-	Rs.50/- & Rs.46.87 nPs for logs 48" and above and 33" to under 48" girth respectively.	50/-
5.	Canarium strictum.	-do-	43.75	50/-
6.	Elaeocarpus tuberculatus.	-do-	43.75	50/-
7.	Symplecos spicata.	-do-	43.75	50/-
8.	Hymenodictyon exceleum.	-do-	43.75	43.75

15/- 55

1	2	3	4	5
9.	Spondias mangifera.	-do-	43.75	43.75
10.	Mechilus macranthu a	-do-	43.75	50/-
11.	Mangifera Indica	-do- subject to Co's option as to the girths.	43.75 for 33" to 48", Rs.46.87 for 49" to 72" and Rs.50/ for 73" and above.	50/-

6. Government reserve to themselves the right to revise the above royalty rates to their advantages. If it is found that under similar conditions and advantage M/s Western India Match Co., are paying higher rates for similar species in other states, they should be paid in Mysore state also.

7. The period of lease for the above extractions will be from the date of this order till 31-12-67 subject to the contidtion that terms of lease and rates for matchwood species may be revised even before that date if circumstances so watent and in such a way favourable to Government.

By order and in the name of the
Governor of Mysore.

Sd/- B.Beerappa
Secretary to Government,
Agriculture & Forest Department.

To
The Chief Conservator of Forests in Mysore, Bangalore.

CHIEF CONSERVATOR'S OFFICE

No. A2(b)93-433/57

BANGALORE:DATED NOVER. 1960.

Copy to

1-3 Conservators of Forests of Shimoga/Coorg/ and Belgaum Circles for information and necessary action. A copy of the proposed agreement form has been sent to him vide this office memo of even No. dated 16-1-58(Belgaum and Mercara) and 2-12-59(Shimoga).The approved form of agreement is not yet received from Government who have been reminded in thematter. The company may be allowed to extract the timbers permitted to be removed by it under the Govermentreference letter dated 4-12-57, orders dated 26.3-60, 23-5-60,27-8-60 and 8-11-60/after taking the necessary safeguards in respect of conditions contemplated in the agreement form and the other subsequent Government orders. The Conservators of Forests may issue necessary instructions to the concerned Divisional Forest officers.

/as above

4-17 Divisional Forest officers of Belgaum, Kanara Northern & Eastern, Dharwar, Shimoga, Bhadravathi, Hassan, Chikmagalur, Sagar, North & South Coorg, Mysore , Kollegal and South Kanara Divisions.

18-20 A2(a)/ A4! Sections. G.O.File.

22/11/60

CHIEF CONSERVATOR OF FORESTS.

22.11.60

SVV/

48 8

THE WESTERN INDIA MATCH CO., LTD.

BRANCHES AT:
CALCUTTA : MADRAS
BAREILLY

REGISTERED OFFICE:
INDIAN MERCANTILE CHAMBERS,
NICOL ROAD, BALLARD ESTATE,
P. O. BOX 254,
BOMBAY.

TELEPHONE : 262583 (8 LINES)
TELEGRAMS : "WESTMATCH"
CODE: BENTLEY'S

Your Ref:
Our Ref:

1st November 1962.

JSR 2/11/62

The Secretary to the Government of Mysore,
Agriculture & Forest Department,
Bangalore.

Dear Sir,

MYSORE GOVERNMENT SECRETARIAT
NO. 8491
2 - NOV 1962
FOREST BRANCH

G.O.No.AFD TMS 57 dated 23rd May 1960, paragraph marked 1 - Mutual adjustment of rates for Matchwood from North and South Kanara Districts effective from 1.1.1963.

Correspondence commencing with our letter of 27th July 1962 and resting with your letter AFD 72 FDP 62 dated 24th October 1962.

We beg to refer to the discussions at the meeting held in your Chambers on 19th September 1962 and to the discussions in the Chambers of the Hon'ble Minister for Forests & Fisheries on 30th and 31st October 1962.

It is conceded on all hands that Matches is an article of daily necessity to all sections of the community, even to the poorest in the land, and during the discussions we have endeavoured to bring to the kind notice of Government the critical position that is developing in the country on the matchwood front and how the situation is tending to become very serious within the next few years, and again emphasized the necessity for reserving for the use of the Match Industry the limited number of species which are usable for match manufacture. We are relieved to know that Government are alive to this position and that the interests of the Match Industry will be protected, as has been done by the various orders passed by Government in respect of matchwood.

As mentioned at the meeting, the present rate (Royalty) for matchwood in Mysore is higher than, for instance, in Andamans, Assam and West Bengal:

Mysore	Rs.46.87 to Rs.50.00 for Bombax Rs.43.75 for other species except for Mango for which it varies from Rs.43.75/50.00	per ton of 50 c.ft.
Andamans	Rs.20.00	
Assam	Rs.35.00 for Bombax Rs.11.50 for other species	
West Bengal	Rs.37.50	

Due to very long leads (300 to 600 miles) from the points of extraction to our factories and our extracting from all areas including very difficult areas, the cost of the matchwood when it reaches our factories works out very high indeed, as will be seen from the statement handed over to the Hon'ble Minister on 31st October.

Being an article of daily necessity also to the poorest, Government of India expect the Match Industry to sell matches at a ceiling in price.

Having regard to these factors we have suggested that the rates (Royalty) be kept unchanged. Government feel, however, that there should be an increase and in response thereto we have suggested that the rates for matchwood may be standardized at Rs.50/- per ton of 50 c.ft. for all matchwood species, even though species other than Bombax Malabaricum are less good from the point of view of match manufacture.

When considering rates (Royalty) for matchwood we submit that the following further factors bearing on this subject may also be borne in mind:

1. Matchwood is soft, whereas plywood and packing case wood include also hardwood. As is well known, hardwoods take very many more years to grow as compared to softwood and therefore always more costly than softwood.

2. For match manufacture only a limited number of species can be used, which makes extraction more difficult and more costly, whereas for manufacture of plywood very many species can be used and for packing cases any and every species can be used.

3. The present rates (Royalty) for matchwood are as high as any charged for plywood and packing cases - in many instances plywood and packing case rates (Royalty) are very much less than charged to matchwood.

4. There is better utilization in the case of matchwood because the Match Industry uses logs lower in girth than plywood.

5. In order to encourage regeneration of matchwood, the Centre shares equally with the States the cost of matchwood plantation. And now there is also the scheme for plantation of fast growing species, the cost of which is borne wholly by the Centre.

6. The annual revenue from Matches Excise Duty is now of the order of Rs.20,00,00,000 (Rs.20 Crores), a good portion of which is distributed by the Centre to the States

Having regard to the various factors mentioned above,

50 10

we trust our proposal will be found reasonable and fair and meet with Government's approval. If Government feel that there should be a still further rise, we request that we may be given an opportunity to call on you again for a discussion and mutual adjustment of rates (Royalty) as provided in G.O. No.AFD 8 TMS 57 dated 23rd May 1960.

Before concluding we may be permitted to take this opportunity to convey to the Government of Mysore our thanks for the assistance they are rendering to the Match Industry by making available to it softwoods suitable for the manufacture of matches.

Yours faithfully,
THE WESTERN INDIA MATCH CO., LTD.,

(T.A.Harihara Iyer)
WOOD MANAGER.

72 FDP 62 :

51 11

INVEST WISELY
Buy NATIONAL SAVINGS CERTIFICATES

MYSORE GOVERNMENT SECRETARIAT
NO. 9886
13 DEC 1962
FOREST BRANCH

INDIAN POSTS AND TELEGRAPHS DEPARTMENT

SERVICE BEFORE SELF

AGRICULTURE & FOREST SECRETARY
2662
GOVERNMENT OF MYSORE

SECRETARY TO GOVT.
No. 4735
14 DEC 1962
FOREST DEPTT.

Class
Prefix } ..... Code .....

Recd. from .....
By .....

Sent at ..... 13 DEC 1962 M.
To .....
By .....

Office stamp
14/12/62

Handed in at (Office of Origin)	Date	Hour	Minute	Service Instructions	Words

X RK AB 497 BOMBAY 12 55 HOMBALAYYA SECRETARY TO
GOVERNMENT AGRICULTURE ANE FORESTS DEPARTMENT VIDHANA
SOUDHA BANGALORE

= YOURLET AFD 72 FDP 62 TWENTYFOURTH OCTOBER OURLET FIRST
NOVEMBER AAA GLAD COULD SPEAK TO YOU OVER PHONE FROM DELHI
TENTH AAA AS REQUESTED DURING CONVERSATION TRUST ORDERS
WILL BE ISSUED NEAR FUTURE LATEST BEFORE END DECEMBER AAA N
AMASKARAM = HARIHARAIYER WESTERN INDIA MATCHCO

Parimala Press Mys. P.T.G/C-books/62—7-10-62—75,000 books.

Mr.Hombalayya, Bangalore. A/c. Westmatch. 12-12-1962.

59 12

I/365

XXX

Copy for Confirmation

HOMBALAYYA
SECRETARY TO GOVERNMENT
AGRICULTURE & FORESTS DEPARTMENT
VIDHANA SOUDHA
BANGALORE

EXPRESS

YOURLET AFD 72 FDP 62 TWENTYFOURTH OCTOBER OURLET FIRST NOVEMBER AAA GLAD COULD SPEAK TO YOU OVER PHONE FROM DELHI TENTH AAA AS REQUESTED DURING CONVERSATION TRUST ORDERS WILL BE ISSUED NEAR FUTURE LATEST BEFORE END DECEMBER AAA NAMASKARAM

I/365

HARIHARAIYER WESTERN INDIA MATCHCO

12-12-1962.

MYSORE GOVERNMENT SECRETARIAT
NO. 22520
18 DEC 1962
H.TSK
FOREST BRANCH

53 (12

Extract from the report of the Chief Conservator of Forests received through letter No.As(b)184-845-58, dated 3rd May 1962.

The existing seigniorage rates sanctioned by Kerala Government for the species conceded to the Packing Case Industry are as under. For some of the species which are conceded in this State to Plywood Industries, the royalty that is being recovered is very much higher than the Kerala seigniorage rates. The particulars furnished below will indicate this aspect:—

Species.	Seigniorage Rate - Kerala State.	Royalty paid by the Mysore Commercial Union.	Royalty paid by the Indian Plywood Mfg. Company.
1	2	3	4
	(Per Cft.	(Per Cft.	(Per Cft.)
1. Bombax malabaricum	0-75 nP.	Re.1.00	Re.1.00
2. Ailanthus malabarica.	0.50 "	1-00	1.00
3. Vateria indica	0.75 "	1.00	1.00
4. Machilus macarntha.	0.50 "	1.00	0.75
5. Lophopetalam wightianum.	0.50 "	-	0.75
6. Dichopsis elliptica.	0.81	1.00	1.00
7. Mangifera indica.	0.50	1.00	0.75
8. Myristica malabarica.	0.50	1.00	1.00
9. Chukrassia tabularis.	0.50	-	0.75
10. Dipterocarpus bourdilloni(spp.)	0.87	1.00	-
11. Hardwickiapinnata.	0.81	1.00	-

Thus it may be seen from the foregoing, that the total cost that the Mysore Industries are incurring for getting their raw material to their factory site is equal and in some cases, more than the cost that the Kerala Industries incur for getting their raw material.

"Copy"
[illegible]
29-10-62

MATCH INDUSTRY -- ROYALTY.

When considering Royalty rates for matchwood, the following factors, peculiar to the Match Industry, have to be borne in mind:

(1) There is a ceiling on the price of the match box, therefore the Match Industry cannot pass on to the consumer any increase in cost. In the case of other industries (Ply-wood etc.) the increase in cost can be passed on to the consumer.

(2) The Centre shares equally with the States the cost of match-wood plantation.

(3) The match industry gives the Centre about Rs.20 Crores per year, 40% of which is returned to the States.

(4) Government of India desire that the price line should be held. Therefore, it follows that the price of the raw material (Soft-woods suitable for match manufacture) should also be held. As an article of daily necessity even to the poorest in the land, holding the price line in respect of matches is of paramount importance.

****

55

15

Immediate.

No: AFD 86 FDP 62

Dt: 2 JAN 1963

To

1. The Secy. to Govt: F. D.
2. The Secy. to Govt: C & I Dept:
3. The C. C. F.

Subject:- Supply of Softwoods at negotiated rates to the Plywood & Match Industries etc. - revision of rates.

Issued on 2 JAN 1963

Reference:

1. Letter No: AFD 22 FDP 62 dt: 24-10-62
2. Letter No: AFD 22 FDP 62 dt: 15.11.62
3. ~~Letter No: AFD 22 FDP 62 dt:~~

I am directed to state that a meeting consisting of the officers noted in the margin is scheduled to be held in the chambers of the Min (F&F) on 4-1-62 at 11 A.M at Vidhana Soudha Bangalore to discuss the subject relating to the fixing of revision of rates of softwoods, which

1. The Secy. to Govt: F. D.
2. The Secy to Govt: C & I. D.
3. The Secy. to Govt: A & F.D.
4. The D. S. to " "
5. The C. C. F.

PTO

57
(16

GOVERNMENT OF MYSORE

Mysore Government Secretariat,
Vidhana Soudha,
Bangalore, dated, the 2nd Jan. 1963
Pushya S.E. 1884

No. AFD 86 FDP 62

From

The Secretary to the Government of Mysore,
Agriculture and Forest Department.

To

1. The Secretary to the Government of Mysore,
Finance Department.

2. The Secretary to the Government of Mysore,
Commerce and Industries Department.

3. The Chief Conservator of Forests in Mysore,
Bangalore.

Sir,

Sub:- Supply of Softwoods at negotiated rates to the Plywood and Match Industries etc. - Revision of rates -

Ref:- 1. Letter No.AFD.72 FDP 62, dated 24.10.1962.
2. Letter No.AFD 72 FDP 62, dated 15.11.1962.

...

I am directed to state that a meeting consisting of the Officers noted in the margin/, is scheduled to be held in the Chambers of the Minister for Forests and Fisheries, on 4.1.1963 at 11-00 A.M. at Vidhana Soudha, Bangalore, to discuss the subject relating to the fixing and revision of rates of softwoods, in respect of the undermentioned Plywood and Match Industries:

1. The Secretary to Government, Finance Department.
2. The Secretary to Government, Commerce and Industries Department.
3. The Secretary to Government, Agriculture and Forest Department.
4. The Deputy Secretary to Government, Agriculture and Forest Department.
5. The Chief Conservator of Forests in Mysore, Bangalore.

1. M/s W.I.M.CO.
2. M/s Indian Plywood Co., Dandeli.
3. M/s Mysore Commercial Union, Bangalore.
4. M/s Hunsur Plywood Works, Hunsur.

I am to request you to please make it convenient to attend the Meeting.

Yours faithfully,

Sd/-
(T.S.RAMAIYA)
Under Secretary to Government,
Agriculture and Forest Dept.

P.T.O.

in respect of the undermentioned

~~are being extended by~~ ~~[illegible]~~

Plywood & Match Industries.

I am to request you to please make it convenient to attend the meeting.

1) M/S W. I. M. Co.
2) " Indian Plywood Co. Dandeli. — Y. F.
3) " Mysore Commercial Kumsi, B Coffee — DR
4) " Hunsur Plywood Works, Hunsur. — U. Secy.

Copy to:—

1. The D. S. to Hon (F & F)
2. The P. A. to Secy. A & F. D.
3. The P. A. to the D. S. A & F. D.

2.1.63.

58

Copy to:-

1. The Private Secretary to the Minister for Forests and Fisheries.

2. The Personal Assistant to the Secretary to Government, Agriculture and Forest Department.

3. The Personal Assistant to the Deputy Secretary to Govt., Agriculture and Forest Department.

J. S. Ramaiya
Under Secretary to Government,
Agriculture and Forest Dept.

Issued
2 JAN 1963

8 Copies

Immediate (17)

Appendix F. G.—1]

SUBJECT P-16/CF

Diary No. of letter replied to

Mysore Government Secretariat.

( )

the Issued 195

Date of issue 3 JAN 1963

Signed by

x P-16/CF.

x indicating the existing rates of the rates which the companies have offered now in 'juxtaposition'.

List of enclosures

Copied by

Copies with 8 copies of Statement to PS to Minister PS to Secy PS to CS

Examined by

Section

File No.

Serial No.

No. AFD 86 FDP 6-2/Elthew

3 JAN 1963

To

1. the Secy. F.D.
2. the Secy C&I Deptt.
3. The C.C.F.

In continuation of this Deptt. letter of even No: dated 2.1.63, I am directed to enclose a comparative statement of rates, ~~as sanctioned or offered by different Industries utilising the softwood~~ the rate structure is to be discussed in the meeting, scheduled

Y.F.

U.S.

WD 04696—GPB—PZS—8,00,000—22-3-60

3.1.63

60 146

GOVERNMENT OF MYSORE

Mysore Government Secretariat,
Vidhana Soudha,
Bangalore, dated 3 JAN 1963

No. AFD 86 FDP 62 1/Cl Shee

From

The Secretary to the Government of Mysore,
Agriculture and Forest Department.

To

1. The Secretary to the Government of Mysore,
Finance Department.

2. The Secretary to the Government of Mysore,
Commerce and Industries Department.

3. The Chief Conservator of Forests in Mysore,
Bangalore.

Sir,

Sub:- Supply of softwoods at negotiated rates to the Plywood and Match Industries etc. - Revision of rates -

...

In continuation of this Department's letter of even Number, dated, the 2nd January, 1963, I am directed to enclose, for your information, a comparitive statement indicating the existing rates and the rates which the Companies have offered now in juxtaposition.

Yours faithfully,

Sd/-
(T.S. RAMAIYA)
Under Secretary to Government,
Agriculture & Forest Dept.

Copy with copies of the Statement to:-

1. The Private Secretary to the Minister for Forests and Fisheries.

2. The Personal Assistant to the Secretary to Government, Agriculture and Forest Department.

3. The Personal Assistant to the Deputy Secretary to Govt., Agriculture and Forest Department.

T. S. Ramaiya

Under Secretary to the Government,
Agriculture and Forest Dept.

LB.3/1/63.

64 22

THE WESTERN INDIA MATCH CO., LTD.

BRANCHES AT:
CALCUTTA : MADRAS
BAREILLY

REGISTERED OFFICE:
INDIAN MERCANTILE CHAMBERS,
NICOL ROAD, BALLARD ESTATE,
P. O. BOX 254,
BOMBAY.

TELEPHONE : 262583 (8 LINES)
TELEGRAMS : "WESTMATCH"
CODE: BENTLEY'S

Your Ref :
Our Ref :

3rd January 1963.

Sri Aziz. Please bring up this also for JBR tomorrow's meeting
3/1/63

The Secretary to the Government of Mysore,
Agriculture & Forest Department,
Bangalore.

Dear Sir,

Lophopetalum Wightianum
Evodia Roxburghiana

We refer to paragraph numbered 3 in G.O. No.AFD 8 TMS 57, dated 8th November 1960, by which consideration of Royalty rates in respect of the above 2 species of matchwood was kept pending.

As softwood rates are now receiving consideration, we request that Royalty rates in respect of these 2 species may also be considered at the same time.

During recent discussions we confirm having agreed to a Royalty rate for these 2 species of Rs.52/- (Rupees Fiftytwo) per ton of 50 cubic feet subject to the other terms and conditions as now applicable to the 11 other species allotted to us and which we are extracting.

Yours faithfully,
THE WESTERN INDIA MATCH CO., LTD.,

WOOD MANAGER.

AFD 29/63

MYSORE GOVERNMENT SECRETARIAT
NO. 29-63
4 JAN 1963
FOREST BRANCH

The request made herein was considered at the meeting, held in Hon'ble Chamberlain's on 4.1.63. The request was negatived, vide proceedings of the meeting. May therefore be filed.

7.1.63.

JBR
7/1/63

C Cofies.

65 23

Appendix F. G.—1]

SUBJECT: Supply of Matchwoods and Plywoods etc to different Industries — revision of rates.

*Diary No. of letter replied to .....

Mysore Government Secretariat.

( )

the 195 .

Date of issue: 23 JAN 1963

Signed by .....

List of enclosures:
1) M/S Wimco
2) M/S Indian Plywoods Mfg - Co (F) XI
3) M/S Hyderabad mill
4) M/S Hmasung Plywoods works
5) M/S Mysore Wood Works.

Copied by .....

Examined by .....

Section

File No.

Serial No.

No. AFD 86 FDP 62 23 JAN 1963

To

1. The Addl. Fin. Secy.
2. The Secy. to C & I Dept.
3. The C.E.E.

Sir,

Ref. this Dept. letter No. of even No. dt. 2.1.63

I am directed to enclose for your information a copy of the Proceedings of the meeting which was held in the Chambers of the Hon'ble F.M. on 4.1.63 indicating the decisions taken on the above-mentioned subject with regard to the marginally noted industries.

Y. F.

JSP

U. Secy

Copy together with

67 25

No.11-14/62-FD
Government of India
Ministry of Food & Agriculture
(Department of Agriculture)

New Delhi, the 10/11 Dec., 1962.

Sl. No. 14 DEC 1962 BANGALORE

From

Shri S.P. Mohoni,
Under Secretary to the Govt. of India.

To

All States /UT Administrations.

Subject:- Supply of wood to the Match industry.

Sir,

I am directed to invite a reference to this Ministry letter No.11-7/58-FD dated the 31st May, 1958 (copy enclosed for ready reference) suggesting that as far as possible Match industry should have the first claim on all semul wood available in your state. WIMCO have represented to this Ministry that as a result of the present emergency supplies from Assam, NEFA and Bhutan have been affected and as such they have to depend on other resources. Govt. of India would therefore repeat their suggestion that to the extent possible Semul (Bombax malabaricum) should be reserved for the Match industry. This Ministry may kindly be informed of the action taken in the matter.

Yours faithfully,

(S.P. Mohoni)
Under Secretary to the Govt. of India.

MYSORE GOVT. SECRETARIAT No. 18 17 DEC 1962

Copy to all [illegible] for information and necessary action.

MYSORE GOVERNMENT SECRETARIAT NO. 9955 13 DEC 1962 FOREST BRANCH

17/12/62

(S.P. Mohoni)
Under Secretary.

66

24) Copy of the Proceedings forwarded to:-

1. The P.S. to Min (F & F).

2. The P.A. to Secy (A & F.D.).

3. The P.A. to D.S., A & F.D.

Initial
29.1.63.

Copy of letter no. 11-7/58-FD dated the 31st May, 1958 from Shri A.C.Jain, Under Secretary to the Govt. of India to All State Governments and Union Territories(Forest Departments).

Subject:- Reservation of Semul (Bombax Malabaricum) for use of match industry.

I am directed to forward a copy of letter No.BDC 9/A dated 20th January, 1958 from Indian Standard Institution on the above subject The Commerce and Industry Ministry as well as this Ministry agrees with the recommendation that as far as possible Match Industry should have first claim on all Semul Wood available in the country. I am therefore to request you to implement the recommendation of the Indian Standard Institution to the maximum extent possible. Action taken in the matter may please be intimated to this Ministry, in due course.

86 FDP 62

69

INVEST WISELY IN NATIONAL SAVINGS CERTIFICATES

INDIAN POSTS AND TELEGRAPHS DEPARTMENT

SERVICE BEFORE SELF

DEPUTY SECRETARY TO GOVT. NO. A211 19 DEC 1962 AGRICULTURE & FOREST DEPT.

AGRICULTURE & FOREST DEPARTMENT No. 2655 18 DEC 1962

Class } Prefix } ..... Code ..... No. C

BEFORE GOVERNMENT SECRETARIAT No. 10071 20 DEC 1962 By 10071

Sent at ..... H. ..... M.
To .....
By .....

Office-stamp

Handed in at (Office of Origin)	Date	Hour	Minute	Service Instructions	Words

Recd. here at H. M.

TO

0 QA AD 319 BOMBAY 17 31 HOMBALAYYA SECRETARY TO GOVERNMENT AGRICULTURE AND FORESTS DEPARTMENT VIDHANA SOUDHA BANGALORE :-

CONTINUATION MY TELEGRAM TWELFTH FLYING BANGALORE NINETEENTH AN LOOK FORWARD CALL ON YOU AAA NAMASKARAM :-

HARIHARAIYER WESTERN INDIA MATCHCO :-

Parimala Press, Mys. P.T.G/C-books/62—7-10-62—75,000 books.

70 Urgent - 28

Appendix F. G.—1J

SUBJECT: Supply of Matchwoods to M/S WIMCO.

Diary No. of letter replied to .....

Mysore Government Secretariat.

( )

the 195 .

Date of issue 24 [illegible] 63

Signed by .....

List of enclosures .....

Copied by .....

Examined by .....

Section

File No.

Serial No. 24 JAN 1963

No. AFD 86 FDP 62 (Suppl)

To

The C.C.F.

Ref. letter No: 11-14/62-FD dt. 10.12.62 from G.O.I., M/FD & Ag

I am directed to request you to offer your remarks on suggestions made in the letter under reference re: reservation of Bombax Malabaricum for M/S in Mysore Forests for M/S

Y.

22.1.63.

21.1

WD 04696—GPB—PZS—8,00,000—22-7-60

Subject:— Matchwoods for M/S W.I.M.Co — revision of rates.

(2)

71/29

G.O. No: AFD 86 FDP 62 Dt. 15 MAR 1963

Read:

P-1/c. — 1. G.O. No: AFD 8 TMS 57 dt. 4.12.1957.

P-2/c. — 2. G.O. No: AFD 8 TMS 57 dt. 26.3.1960.

P-3/c. — 3. G.O. No: AFD 8 TMS 57 dt. 23.5.1960.

P-5/c. — 4. G.O. No: AFD 8 TMS 57 dt. 8.11.1960

Preamble: In the G.O. of 4.12.57, read at Sl.1 above M/S WIMCo were permitted to extract matchwoods, at the rates prescribed in the letter, from the forest areas of North Kanara and South Kanara. In the G.O. of 23.5.60, read at Sl. 3 above, an extension of 5 years from 1.1.63 in the period of extraction of matchwoods by the Co. in the forests of North Kanara & South Kanara, was granted. In the G.O. dt. 8.11.1960, read at Sl. 4 above, the Co. was allowed extraction of matchwoods in the additional areas of the Forest Circles of Belgaum, Shimoga & Coorg, at the rates prescribed in the G.O, the period of lease being till 31.12.67. In view of the steep rise in the prices of timber it is found expedient to enhance the rates of matchwoods to be extracted by M/S W.I.M.Co. At a meeting held

Issued 1963

P.T.O.

in the chambers of the Min (F & [redacted]) on 4.1.1963 it was decided that the rates of matchwoods to be exploited by M/S W.I.M. Co. should be increased by 20 o/o.

Order.

Govt. are pleased to direct that the rates of match-woods to be extracted by M/S W.I.M. Co., ~~should be increased by 20 o/o~~ from the old areas of North Kanara and South Kanara, allotted vide G.O. No: AFD 8 TMS 57 dt. 4.12.57 and also from the additional areas allotted ~~the~~ vide G.O. No: AFD 8 TMS 57 dt. 8.11.1960, should be increased by 20 o/o from 1.1.1963 for a period of three years, Govt. hereby reserving ~~to themselves~~ the right to revise the said rates even earlier than 31-12-1965 if circumstances so warrant and in such a way as favourable to Govt. The increase of 20 o/o in the rates for M/S W.I.M. Co. should be worked up on the average

PTO

of the existing rates of matchwoods, sanctioned for the old areas and the additional areas and calculated to the nearest surplus.

The supply of matchwoods to M/S W. I. M. Co. should be continued on a lease basis upto 31-12-1967 as per Govt. orders quoted above. The C.C.F. should forward to Govt. the proposals for the continuance or otherwise of the lease basis by the end of June 1967.

The C.C.F. is requested to take further action and execute necessary agreement in this behalf and also send for the information of Govt a list indicating the rates of species allotted to this Company as fixed above.

By order —

Sd/-
U. Sey

1. The C.C.F.
2. The A. G (Th Res' F.D):
3. M/S W. I. M. Co.
4. The W. G.

Sd/-
30.1.63. 31/1

Matchwoods for M/s W.I.M.CO. - Revision of rates.

PROCEEDINGS OF THE GOVERNMENT OF MYSORE.

ORDER NO. AFD 86 FDP 62, DATED, BANGALORE, THE 15TH MARCH, 1963.

Read:

1. Govt. Letter No.AFD 8 TMS 57, dated 4.12.1957.
2. G.O. No. AFD 8 TMS 57, dated 26.3.1960.
3. G.O. No. AFD 8 TMS 57, dated 23.5.1960.
4. G.O. No. AFD 8 TMS 57, dated 8.11.1960.

...

Preamble:

In the Government letter of 4.12.1957, read at Sl.No.1 above, M/s WIMCO, were permitted to extract matchwoods, at the rates prescribed in the letter, from the Forest areas of North Kanara and South Kanara. In the Government Order of 23.5.1960 read at Sl.No.3 above, an extension of 5 years from 1.1.1963 in the period of extraction of matchwoods by the Company in the Forests of North Kanara and South Kanara, was granted. In the Government Order, dated 8.11.1960 read at Sl.No.4 above, the Company was allowed extraction of matchwoods in the additional areas of the Forest Circles of Belgaum, Shimoga and Coorg, at the rates prescribed in the Government Order, the period of lease being till 31.12.1967. In view of the steep rise in the prices of timber, it is found expedient to enhance the rates of matchwoods to be extracted by M/s. WIMCO. At a meeting held in the Chambers of the Minister for Forests and Fisheries on 4.1.1963, it was decided that the rates of matchwoods to be exploited by M/s WIMCO, should be increased by 20%.

ORDER

2. Government are pleased to direct that the rates of matchwoods to be extracted by M/s WIMCO, from the old areas of North Kanara and South Kanara, allotted vide Government letter No. AFD 8 TMS 57, dated 4.12.1957 and also from the additional areas allotted vide G.O.No.AFD 8 TMS 57, dated 8.11.1960, should be increased by 20% from 1.1.1963, for a period of three years, Government, however, reserving the right to revise the said rates even earlier than 31.12.1965 if circumstances so warrant and in such a way as favourable to Government. The increase of 20% in the rates for M/s WIMCO. should be worked up on the average of the existing rates of matchwoods sanctioned for the old areas and the additional areas and calculated to the nearest rupee.

3. The supply of matchwoods to M/s W.I.M.CO. should be continued on a lease basis upto 31.12.1967, as per Government Orders quoted above. The Chief Conservator of Forests should forward to Government, the revised proposals for the continuanc or otherwise of the lease period by the end of June, 1967.

The Chief Conservator of Forests in Mysore, Bangalore, is requested to take further action and execute necessary

... P.T.O.

Agreement in this behalf and also send for the information of Government, a list indicating the rates of species allotted to this Company, as fixed above.

By Order and in the Name of the Governor of Mysore,

Sd/-
(T.S.RAMAIYA)
Under Secretary to Government,
Agriculture and Forest Dept.

To

The Chief Conservator of Forests in Mysore, Bangalore.
The Accountant General, Mysore, Bangalore, through the Finance Department.
The M/s W.I.M.Co.
Copy to the Weekly Gazette.

....

" C O P Y

86 FDP 62.

76 (33

THE WESTERN INDIA MATCH CO., LTD.

BRANCHES AT:
CALCUTTA : MADRAS
BAREILLY

REGISTERED OFFICE:
INDIAN MERCANTILE CHAMBERS,
NICOL ROAD, BALLARD ESTATE,
P. O. BOX 254,
BOMBAY.

TELEPHONE : 262583 (8 LINES)
TELEGRAMS : "WESTMATCH"
CODE: BENTLEY'S

Your Ref:
Our Ref:

April 3, 1963.

MYSORE GOVT. SECRETARIAT
6 APR 1963
SECTION

The Secretary to Government,
Agriculture and Forest Department,
Government of Mysore,
Vidhana Soudha,
BANGALORE-1.

6/4/63

Dear Sir,

Matchwood from Mysore State.

MYSORE GOVERNMENT SECRETARIAT
NO. 3074/63
8 - APR 1963
86 FDP 62
FOREST BRANCH

P-32/CF.

We are obliged to you for sending us a copy of your Order No.AFD 86 FDP 62 dated 15th March 1963 and have duly noted the increase of 20%, effective from 1-1-1963, in the rates for matchwood extracted by us from your State.

Yours faithfully,
THE WESTERN INDIA MATCH CO., LTD.,

Sri A

H:TSK.

WOOD MANAGER.

May simply be filed.

Intt.
10.4.63.

U. Secy.

2/11/4

86 FDP 62

77

134

No.11-14/62-FD
Government of India
Ministry of Food & Agriculture
(Department of Agriculture)

New Delhi, the 22 Jan. 1963.

MYSORE GOVT. SECRETARIAT
No. 14
29 JAN
FOREST DEPT.

From

Shri S.P.Mohoni,
Under Secretary to the Govt. of India.

MYSORE GOVERNMENT SECRETARIAT
NO. 1008/62
31 JAN 1963
72 FD PR
FOREST PROJECTS

To

All State Govts./U.Ts.Administration

Subject:- Supply of Wood to Match Industry.

Sir,

25/CF

In continuation of this Ministry's letter of even no. dated the 10th Dec.,1962, on the above subject, I am directed to say that since the Match Industry continue to experience difficulties in the matter of supply of Matchwood, to the forest Deptt. may be advised to ensure maximum supply of semul to match factories and also as much of the following other species as are available for the match industry after keeping in view the demand for these species from other timber based industries such as ply-wood, pencil slat manufacture etc:-

P . T. O.

1. Ailanthus excelsa
2. Ailanthus malabarica
3. Alstonia scholaris
4. Canarium strictum
5. Elaeocurpus tuberculatus
6. Evodia roxburghiana
7. Hymenodictyon excelsum
8. Lophopetalum wightianum
9. Machilus macrantha
10. Mangifera indica
11. Salmalia malabaria
12. Spondias magnifera
13. Symplocos spicata
14. Trewia nudiflora

Yours faithfully,

(S. P. Mohoni)
Under Secretary to the Govt. of India.

79
135

RGN/26/4 No: AFD 8/6 FDP 62 Dt- 27-4-63

To
The C.C.F.

Subject:— Supply of Wood to Match Industry

28/c. In continuation of this Deptt. letter of even No: dt. 24.1.63, I am directed to enclose a copy of letter No: 11-14/62-FD dt. 22.1.63 from G.O.I., M/FD & Agr, New Delhi, for necessary action.

N.W.T.

Y.F.

U. Secy.

Issued
27/4/63

Inst.
23.4.63.

Copy of the letter No.11-14/62-FD, dated 22.1.1963, from the Under Secretary to the Government of India, Ministry of Food and Agriculture, (Department of Agriculture), New Delhi, to all State Governments/U.Ts. Administration.

...

Sub:- Supply of wood to Match Industry.

...

In continuation of this Ministry's letter of even No. dated the 10th Dec., 1962, on the above subject, I am directed to say that since the Match Industry continues to experience difficulties in the matter of supply of Matchwood, to the forest Deptt. may be advised to ensure maximum supply of semul to match factories and also as such of the following other species as are available for the Match industry after keeping in view the demand for these species from other timber based industries such as ply-wood, pencil slat manufacture etc:-

1. Ailanthus excelsa
2. Ailanthus malabarica
3. Alstonia scholaris
4. Canarium strictum
5. Eloeocurpus tuberculatus
6. Evodia roxburghiana.
7. Hymenodictyon excelsum
8. Lophopetalum wightianum
9. Machilus macrantha
10. Mangifera indica
11. Salmalia malabaria
12. Spondias magnifera
13. Symplocos spicata
14. Trewia nudiflora

...

" C O P Y "

REMOVALS OF TIMBER TO M/s. WESTERN INDIA MATCH CO., LTD., - FIXING SELLING PRICES FOR ~~[illegible]~~ STANDING Timber. Vide Govt Order No. AFD-86-FR-62 dt 15-3-1963

Existing rate - Price per ton of 50 cft. Length 6'-6" & above

From 1-4-63 Price per ton

Sl. No.	Kind of Species.	North Kanara. Rs.	South Kanara. Rs.	Northern Zone. Rs.	Southern Zone. Rs.	Total Rs.	Average Price per Rs.	20% increase. Rs.	Total. Rs.	Price fixed (rounded off to the nearest rupee)
1.	Bombax malabaricum 33" to 47" girth	46.87	46.87	46.87	50.00	190.61	47.5	9.53	57.18	57.00
	48" to 120" girth	50.00	50.00	50.00	50.00	200.00	50.0	10.00	60.00	60.00
2.	Ailanthus excelsa	43.75	43.75	50.00	50.00	187.50	46.9	9.37	56.24	56.00
3.	-do- malabaricum	43.75	43.75	50.00	50.00	187.50	46.9	9.37	56.24	56.00
4.	Alstonia scholaris	43.75	43.75	43.75	50.00	181.25	45.3	9.06	54.37	54.00
5.	Canarium strictum	43.75	43.75	43.75	50.00	181.25	45.3	9.06	54.37	54.00
6.	Elaeocarpus tuberculatus	43.75	43.75	43.75	50.00	181.25	45.3	9.06	54.37	54.00
7.	Symplocos spicata	43.75	43.75	43.75	50.00	181.25	45.3	9.06	54.37	54.00
8.	Spondias mangifera	43.75	43.75	43.75	43.75	175.00	43.75	8.75	52.50	53.00 +
9.	Machilus macrantha	43.75	43.75	43.75	50.00	181.25	45.3	9.06	54.37	54.00
10.	Mangifera indica * 33" to 48" girth	43.75	43.75	43.75	50.00	181.25	45.3	9.06	54.37	54.00
	49" to 72"	46.87	46.87	46.87	50.00	190.61	47.5	9.53	57.18	57.00
	73" to and upto 120"	50.00	50.00	50.00	50.00	200.00	50.0	10.00	60.00	60.00
11.	Hymenodictyon excelsum	43.75	43.75	43.75	43.75	175.00	43.75	8.75	52.50	53.00 +

* Subject to company's option as to the girth

I.D.V.I.

CHIEF CONSERVATOR OF FORESTS.

Bangalore 9-8-63

82 39

THE WESTERN INDIA MATCH CO., LTD.

BRANCHES AT:
CALCUTTA : MADRAS
BAREILLY

REGISTERED OFFICE:
INDIAN MERCANTILE CHAMBERS,
NICOL ROAD, BALLARD ESTATE,
P. O. BOX 254.
BOMBAY.

TELEPHONE : 262583 (8 LINES)
TELEGRAMS : "WESTMATCH"
CODE: BENTLEY'S

REGISTERED.

Your Ref :

Our Ref :

September 26, 1963.

GOVERNMENT SECRETARIAT
No. 2779/63
28 SEP 1963
MINISTER BANGALORE

Sri T. S. Ramaiya,
Under Secretary to Government,
Agriculture and Forest Department,
Government of Mysore,
Vidhana Soudha,
BANGALORE.

28/9/63

Dear Sri Ramaiya,

MATCHWOOD.

Sri A

I tried to get you on the phone to-day but was informed that to-day is a holiday in Bangalore.

Our Field Organisation tell me that they have heard reports that the Indian Plywood Manufacturing Co. Private Ltd. have been allowed to extract timber from forests from Sirsi to Hosnagar and that included in their list of species are certain species of matchwood which we have been allowed to extract. I trust that this report is without foundation as we have been allowed to exploit from 1-1-1958 from the North and South Kanara Districts:

Bombax Malabaricum
Machilus Macrantha
Canarium Strictum
Mangifera Indica

and from 26-3-1960 we are allowed to extract the following 11 species (including the 4 species mentioned above) from the whole of Mysore State where there were no previous commitments:

Bombax Malabaricum ✓
Machilus Macrantha ✓
Canarium Strictum ✓
Mangifera Indica ✓
Ailanthus Excelsa ✓
Ailanthus Malabarica
Alstonia Scholaris
Eleocarpus Tuberculatus
Hymenodictyon Excelsum ✓
Spondias Mangifera
Symplocos Spicata.

81 37

No. A2-(B)-2-362/WMC/63-64.
To Encl: One

OFFICE OF THE CHIEF CONSERVATOR OF FORESTS IN MYSORE, BANGALORE.
DATED: 20-8-1963

The Secretary to the Government of Mysore,
Agriculture and Forest Department,
B A N G A L O R E.

Sir,

Subject:--Match-woods for Messrs. The Western India Match Co., Revision of rates for removal of standing timbers.

References:--i). Government letter No.AFD-8-TMS-57, dated 4th December 1957.

ii). Government Order No.AFD-8-TMS-57, dated 26th March 1960.

iii). Government Order No.AFD-8-TMS-57, dated 23rd May 1960.

iv). Government Order No.AFD-8-TMS-57, dated 8th November 1960.

v). Government No.AFD-86-FDP-62, dated 15th March 1963.

.....

MYSORE GOVT. SECRETARIAT AGRI. & FOREST DEPT. (APPAL SECTION) No. 2 22 AUG 1963

22/8/63

I enclose herewith a statement detailing the average rates fixed (per ton of 50 cft.) for the several species conceeded to Messrs. WIMCOS under the above Orders, as directed in Government Order, dated 15th March 1963, for favour of information.

2. The rates (for removal of standing timbers) will be effective for a period of three years from 1st January 1963, subject to revision even earlier to 31st December, 1965.

3. I have directed the Conservators of Forests to recover the difference in price for the several species removed by WIMCOS since 1st January 1963.

4. I am taking action to get necessary agreement executed by Messrs the WIMCOS and shall forward to Government a copy thereof for the information of Government.

MYSORE GOVERNMENT NO. 66-7-1/63 22 AUG 63 FOREST BRANCH

Yours faithfully,

CHIEF CONSERVATOR OF FORESTS.

20-8-63

B.K. 20/8/6.

84 40

It will be remembered that we have on many previous occasions drawn the attention of Government to the critical matchwood supply position in the country and how important it is to preserve for the use of the Match Industry all softwoods suitable for match manufacture in order to avoid any shortage of matches, a commodity essential to all sections of the community, rich and poor alike. The Match Industry has now entered the critical phase in the matchwood supply position. This is also borne out by the discussion on the subject in Lok Sabha on 23rd August 1963 and in this connection I send herewith a copy of the statement made in the Lok Sabha on 23-8-1963 by the Union Minister of Industry.

We need hardly repeat that we are interested in all the matchwood that Mysore State can give and submit that, until the matchwood supply position in the country reaches a stage where it is capable of meeting the demands of the Match Industry (according to the Union Minister of Industry, for plantations to mature it will take at least 35 years), all softwoods suitable for manufacture of matches should be reserved for the use of the Match Industry.

With kind regards,

Yours sincerely,

(T.A. Harihara Iyer)
WOOD MANAGER.

Encl.
H:TSK.

85 (41

Extract from Lak Sabha Proceedings on 23.8.1963.

"SOFT TIMBER

243 (Shri Warior:
(Shri Dinen Bhattacharya:
(Shri Vasudevan Nair:
(Shri M.N. Swamy:

Will the Minister of Industry be pleased to state:

(a) whether it is a fact that there is a shortage of soft timber required for the manufacture of matches; and

(b) if so, the steps taken by Government to overcome the shortage?

The Minister of Industry (Shri Kanungo): (a) and (b). A Statement is laid on the Table of the House.

STATEMENT

(a) There is a general shortage of industrial timber of all types including timber required for the match industry.

(b) the steps taken by the Government to overcome the shortage are enumerated below:

(i) Semul (Salmalia Malabarica) the main indigenous species suitable for match manufacture has been reserved for the match industry.

(ii) A special programme for raising match wood plantations was launched by the State Governments on a regular basis as a part of the Second Plan. The Govt. of India provided subsidy up to 50 per cent for encouraging match wood plantations. New plantations extending over an area of about 80,000 acres were undertaken during the First and Second Plans.

(iii) An area of 50,000 acres is proposed to be covered under match wood plantations during the Third Plan period. The Central Government will continue to share the expenditure with the State Governments on a 50:50 basis.

(iv) On the basis of research undertaken at the Forest Research Institute, Dehra Dun, several other species have been found suitable for the manufacture of matches. These species have been approved and included in the Indian Standard Specifications.*

(v) Possibilities are also being explored of exploiting the hitherto untapped inaccessible areas".

Copied: TVS/27.9.1963.

*attached.

86

ERRATUM

IS:1140-1959 SPECIFICATION FOR LOGS FOR MATCHES

Page 3, Table I, against 'Sl No. VI (*Bombax insigne*)', in the column under 'Boxes'

please read '×' *in place of* '—'

87

ERRATUM NO. 2

IS: 1140-1959 SPECIFICATION FOR LOGS FOR MATCHES

Page 7, clause **8.1**, line 3

please read 'prophylactic' *for* 'preservative'

TABLE I SPECIES OF TIMBER SUITABLE FOR MATCH MANUFACTURE

(*Clause* 3.1)

Sl No.	Botanical Name	Trade Name	Use	
			Splints	Boxes
I	*Ailanthus excelsa* Roxb.	maharukh	×	—
II	*Ailanthus grandis*	borpat	×	—
III	*Ailanthus malabarica* DC	mattipal	×	—
IV	*Alstonia scholaris* R. Br.	chaitan	×	—
V	*Anthocephalus Cadamba* Miq.	kadam	×	—
VI	*Bombax insigne*	didu	×	—
VII	*Canarium euphyllum* Kurz.	white dhup	—	×
VIII	*Canarium strictum* Roxb.	ral dhup	—	×
IX	*Cryptocarya amygdalina*	kalasum	×	×
X	*Dysoxylum malabaricum* Bedd.	white cedar	×	×
XI	*Elococarpus tuberculatus* Roxb.	rudrak	×	—
XII	*Endospermum malaccense*	bakota	×	×
XIII	*Evodia roxburghiana* Benth.	kambli	×	—
XIV	*Gyrocarpus americanus* Jacq.	tanaku	×	—
XV	*Hymenodictyon excelsum* Wall.	kuthan	×	—
XVI	*Lophopetalum wightianum* Arn.	banati	×	×
XVII	*Machilus macrantha* Nees.	machilus	—	×
XVIII	*Mangifera indica* Linn.	mango	—	×
XIX	*Salmalia malabaria* Schott & Endl.	semul	×	×
XX	*Sideroxylon longepetiolatum* King et Prain.	lambapatti	×	×
XXI	*Spondias magnifera* Willd.	amra	×	×
XXII	*Sterculia campanulata* Wall.	papita	×	—
XXIII	*Sterculia vellosa* Roxb.	udal	×	—
XXIV	*Symplocos spicata*	podipari	×	—
XXV	*Trewia nudiflora* Linn	gutel	×	—

Note — × means suitable
— means unsuitable

3. SPECIES OF TIMBER

3.1 Unless specified otherwise, logs for the manufacture of match boxes and splints shall be from any of the species given in Table I. Other species found suitable may also be supplied subject to prior agreement between the purchaser and the supplier.

4. DIMENSIONS AND MEASUREMENT

4.1 Length

4.1.1 *Gross Length* — The gross length shall be not less than 2 metres (or 6·5 ft). A minimum gross length of 3 metres (or 10 ft) is, however, recommended. The maximum, if required, shall be specified by the purchaser. It shall be permissible to supply 5 percent of the logs having gross lengths of 1·4 m (or 4·5 ft).

4.2 Girth

4.2.1 *Mid-Girth Over-Bark*—The mid-girth over-bark shall be not less than 90 cm (or 3·0 ft) and not more than 300 cm (or 10·0 ft).

4.2.1.1 For *Evodia roxburghiana* Benth., a minimum mid-girth of 60 cm (or 2·0 ft) over-bark shall be permissible.

4.2.1.2 For *Mangifera indica* Linn. and *Spondias magnifera* Willd., the mid-girth over-bark shall be not more than 167 cm (or 5·5 ft).

4.3 Measurement — The length and the girth of the log shall be measured as specified under **4.3.1** and **4.3.2**. In measuring the length, fractions of a metre shall be rounded off to the nearest lower 5 cm. In measuring the girth, fractions of a centimetre shall be ignored.

4.3.1 *Length*

4.3.1.1 When the ends are snouted, the length of the logs shall be measured from the first felling cut, that is the cut extending farthest into the length from the butt end, to the nearest cut at the top end (*see* Fig. 1A).

4.3.1.2 When cross-cut by a saw and the end surfaces are parallel to each other, the length of the log shall be measured from one end to the other end (*see* Fig. 1B) and, when the end surfaces are not parallel to each other, the length shall be measured

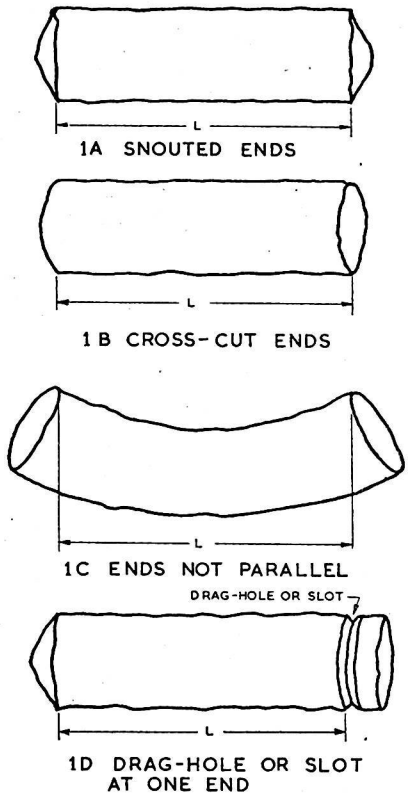

FIG. 1 MEASUREMENT OF LENGTH OF LOGS

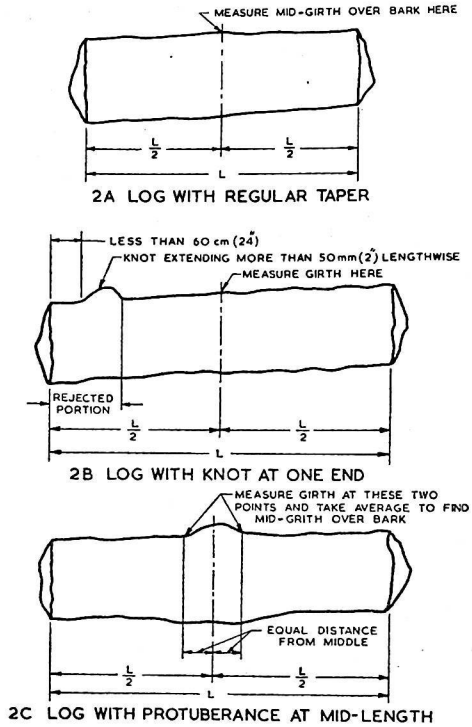

FIG. 2 MEASUREMENT OF GIRTH

by the shortest distance between the two ends (*see* Fig. 1C).

4.3.1.3 Where there is a drag-hole or a slot on one end, the length of the log shall be measured between the other end and the slot (*see* Fig. 1D).

4.3.2 *Girth*

4.3.2.1 The girth, in the case of logs of regular taper and without any protuberance at mid-length shall be measured at the mid-length of the log (*see* Fig. 2A and 2B).

4.3.2.2 In the case of a log with irregular taper, three girth measurements shall be taken, that is one at the mid-length and one at each end, the mean girth being obtained by taking the average of these three measurements.

4.3.2.3 In the case of a log with regular taper but with protuberance at mid-length, the girth shall be measured at each side of the protuberance as near to it as possible but at equal distance from the middle of the log and the average taken (*see* Fig. 2C).

4.3.3 *Volume* — The volume of a log shall be calculated as:

$$V = \left(\frac{G}{4}\right)^2 \times L$$

where

V = volume,
G = girth, and
L = length.

4.4 Unless otherwise agreed to between the purchaser and the supplier, 10 percent reduction on over-bark measurements shall be made as bark allowance.

5. REQUIREMENTS

5.1 Logs shall be supplied to the factories fresh after felling, and the time allowed between their felling and supply to the factories should not normally exceed two months. In order to keep the logs fresh, the bark on the logs shall as far as possible be left intact.

5.2 The logs shall be sound, cylindrical, of straight growth, reasonably fresh-cut and with the bark intact. The logs shall be free from knobs, twisted or spiral growth, knots, cracks, rings, bulges,

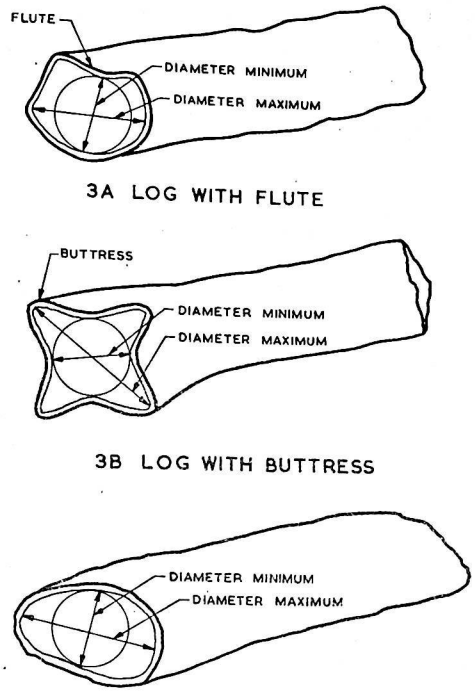

FIG. 3 MEASUREMENT OF FLUTE, BUTTRESS AND OVAL LOGS

buttresses, hollow, dry or decayed portions, over-maturity, crotches, brashwood and any kind of decay (rot) including dote, insect attack or other defects excepting those permitted under **6**. The plugging of defects shall not be permissible.

6. *DEFECTS

6.1 Logs shall be inspected for defects and rejections or full deductions for defects in gross length and mid-girth over-bark shall be made in the manner specified under **6.2** to **6.20**. A deduction in length shall be made for the clear portion between any two defects or any defect and the end of the log if such portion is less than 45 cm (or 18 in.) in length.

6.2 Bark Pockets, Bird Pecks and Wounds not exceeding 12 mm (or ½ in.) in diameter and 25 mm (or 1 in.) in depth shall be permissible up to two in number per 3 m (or 10 ft) length of log.

6.3 Borer Hole — The logs shall be free from marine borers and powder post borers. Occasional borer holes not exceeding 6 mm (or ¼ in.) in diameter shall be permissible. However, logs over 1·5 m (5 ft) in girth may be accepted provided the borer holes do not extend beyond 25 mm (or 1 in.) in depth.

6.4 Dote, Rot (Including Blue Rot) Sun Cracks and Driage shall be permissible if these do not penetrate more than 12 mm (or ½ in.) into the log. In case penetration is more than 12 mm (or ½ in.), a deduction in girth equal to six times the maximum penetration of these defects in any part of the log shall be made.

6.5 Bulge, Knob, Knot — A bulge, knob or live knot extending up to 50 mm (or 2 in.) and dead knot extending up to 25 mm (or 1 in.) lengthwise on a log and occurring not more than three in number in a length of 3 m (or 10 ft) shall be permissible. If extending more than 50 mm (or 2 in.) in case of a bulge, knob or live knot, and 25 mm (or 1 in.) in case of a dead knot, or occurring more than three in number in a length of

*Illustrations of defects are exaggerated to bring out the defects clearly.

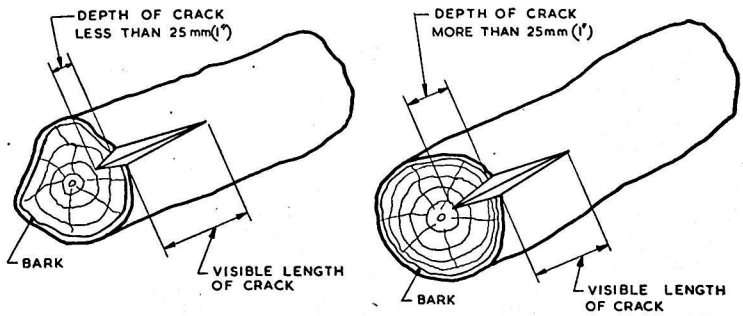

4A Crack Less Than 25 mm (1") in Depth

4B Crack More Than 25 mm (1") in Depth

FIG. 4 MEASUREMENT OF CRACKS

3 m (or 10 ft), it shall constitute a defect to its full extent lengthwise on the log, and corresponding deduction shall be made in the length.

6.6 Burnt Part — If any part of a log has been burnt, the length of the burnt portion and 75 mm (or 3 in.) on each side of the same shall be deducted from the length of the log.

6.7 Buttress, Flute or Oval Logs — The girth of logs affected by these defects shall be calculated by taking the average diameter of the inscribed circle at the small and big ends of a log and then multiplying the average by 3 (*see* Fig. 3).

6.8 Crack (Split)— A crack penetrating not more than 25 mm (or 1 in.) from the surface (excluding the thickness of the bark) shall be permissible. Cracks penetrating more than 25 mm (or 1 in.) from the surface shall constitute a major defect and a deduction in length shall be made to the extent of the visible length of the cracks plus 15 cm (or 6 in.) (*see* Fig. 4).

6.9 Crotch — Full deduction of the length of the crotch shall be made from the length of the log.

6.10 Curvature — If the log has got a sharp bend, the straight portion of the log on each side of the bend shall be treated as a separate log and each such log shall conform to the requirement of this standard (*see* Fig. 5A). A deviation in straightness up to 10 cm (or 4 in.) in a length of 3 m (or 10 ft) shall be permissible (*see* Fig. 5B). If there is more than one curvature, the log shall be rejected (*see* Fig. 5C).

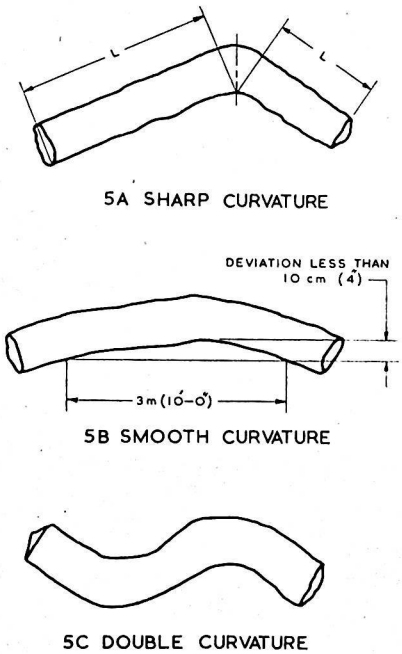

FIG. 5 MEASUREMENT OF CURVATURE

6.11 Drag-Hole, Slot and Snout — These shall be excluded when measuring the length of the log (*see* Fig. 1D).

6.12 Eccentric Heart — Where the distance from the surface (or, in oval logs, from the inscribed circle), anywhere on a log to the heart of the log, is less than one-third the diameter, the log shall be rejected entirely if such log is so affected throughout (*see* Fig. 6). If only a part of the log is so affected, the affected portion shall be cut off or deducted from the length of the log.

6.13 Hollow Centre — Hollow centres exceeding 50 mm (or 2 in.) in diameter shall constitute a defect to the extent of the measurable length of the hollow plus 30 cm (or 1 ft), to be deducted from the gross length of the log. Logs with plugged centres shall be entirely rejected.

6.14 Interlocked or Twisted Grain — Logs with interlocked or twisted grain shall be entirely rejected.

6.15 Over-Maturity — Logs affected with hard discoloured centres not more than 15 cm (or 6 in.) in diameter in the centre may be accepted, provided the log is free from other defects and has a mid-girth over-bark of 180 cm (or 6 ft).

6.16 Shakes

6.16.1 *Cup Shake (Ring)*— Cup shake visible on one or both ends and located within 50 mm (or 2 in.) from the centre heart (pith) of the log shall be permissible.

6.16.1.1 If there is only one ring within 50 mm (or 2 in.) from the surface of a log, the log shall be accepted, subject to the girth being computed by taking the smallest diameter of the ring and multiplying the same by 3. If there are two or more rings at different distances from the centre of a log, the entire log shall be rejected.

6.16.2 *Heart Shake, Radial Shake, Star Shake* visible on one or both ends and located within 50 mm (or 2 in.) from the centre heart (pith) of the log shall be permissible.

6.16.3 *Spongy Heart, Soft Heart, Punky Heart* — Logs affected with such defects shall be rejected entirely if the spongy, soft or punky heart exceeds 50 mm (or 2 in.) in diameter.

6.17 Spongy (Too Soft) Wood — Logs with spongy (too soft) wood shall be rejected entirely.

6.18 Taper — A taper up to one cm per 10 cm in diameter in every 2·5 m (or 8 ft) length of log shall be permissible.

6.19 Under-Girth or Short Length Log — Logs below the stipulated minimum mid-girth and length shall be rejected entirely.

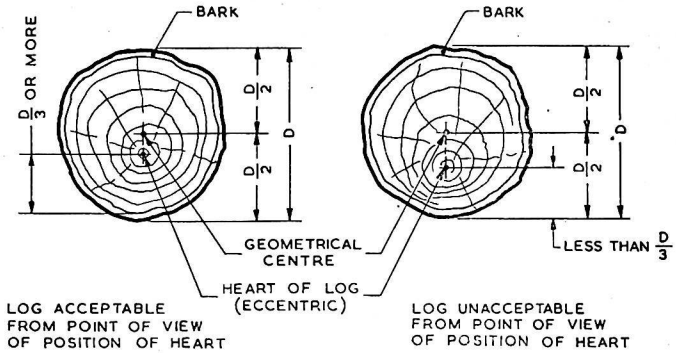

6A ECCENTRIC HEART OF CYLINDRICAL LOG

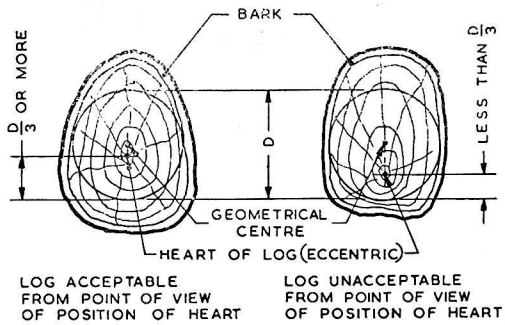

6B ECCENTRIC HEART OF NON-CYLINDRICAL LOG

FIG. 6 ECCENTRIC HEART

6.20 Not withstanding the permissible defects referred under **6.2** to **6.19**, the total number of defects permitted under **6.2** to **6.19** shall not collectively exceed four per 3 m (or 10 ft) length of the log.

7. PLACE OF MEASUREMENT

7.1 Measurement and inspection shall be done in the presence of the representatives of the purchaser and the supplier at the place mutually agreed upon, and where this is not possible, the procedure for measuring and inspection shall be stipulated in the contract.

8. PRELIMINARY TREATMENT

8.1 Immediately after felling of the trees, the ends of logs and portions uncovered with bark shall be given a preservative treatment as specified for group 6 in Table I of IS : 401-1954.

93

PUBLICATIONS OF INDIAN STANDARDS INSTITUTION

INDIAN STANDARDS

Over 1 200 Indian Standards, broadly classified under the following heads, have been issued so far:

Engineering
Bicycle Components
Cutlery
General Engineering
Machinery
Miscellaneous Items
Sports Goods
Tools

Building
Bitumen, Tar and Tar Products
Builder's Hardware
Building Design
Cement and Concrete
Floor and Roof Coverings
General Civil Engineering
Lime and Gypsum
Miscellaneous Items
Refrigeration and Air-Conditioning
Services Equipment and Accessories
Timber and Wood Products

Textile
Cotton
Jute
Miscellaneous Items
Silk
Textile Mill Stores and Accessories
Textile Test Methods
Wool

Chemical
Coal and Coke
Essential Oils
General Chemicals
Glass and Ceramic Wares
Inks, Paper and Other Allied Products
Leather and Leather Goods
Metal Containers
Oils, Fats and Soaps
Paints, Printing Inks, Lac and Allied Materials
Petroleum Products and Lubricants
Rubber — Plastics and Allied Products

Agricultural & Food
Cereal Products
Confectionery
Dairy Products
Food Grain Storage
Pest Control Products
Starches
Sugars

Structural & Metals
Chemical Analysis
Non-Ferrous Metals
Ores
Physical Tests
Pig Iron, Cast Iron and Malleable Cast Iron
Refractories
Solders
Steel and Steel Products
Welding
Design and Construction

Electrotechnical
Electrical Line Materials
Electrical Rotating Machinery
Electronics and Radio Equipment
Heavy Electrical Equipment
Light Electrical Equipment

Miscellaneous
Conversion Tables and Guide for Conversion to Metric System
Documentation
Metric Weights and Measures
Quality Control and Industrial Statistics

OTHER PUBLICATIONS

	Rs
ISI Bulletin (Published Every Two Months)	
Single Copy	2·00
Annual Subscription	6·00
Annual Reports (from 1948-49 Onwards)	2·00 each
Report of the ISI Special Committee on Weights and Measures	2·00

ISI Handbook 1957 with 1958 Addendum (Rs 3·00 per copy), gives brief reviews and other particulars of Indian Standards

Available from:

INDIAN STANDARDS INSTITUTION

Headquarters

Manak Bhavan, 9 Mathura Road, New Delhi 1

Phones: 45915-9 43063-4 Grams: 'Manaksanstha' New Delhi

Bombay Branch Office
General Assurance Building
230 Dr. Dadabhoy Naoroji Road
Fort, Bombay 1
Phone: 252782
Grams: 'Manaksanstha' Bombay

Calcutta Branch Office
P-11 Mission Row Extension
Calcutta 1
Phone: 23-1823
Grams: 'Manaksanstha' Calcutta

Madras Branch Office
2/21 First Line Beach
Madras 1
Phone: 3836
Grams: 'Manaksanstha' Madras

PRINTED AT THE CATHOLIC PRESS, RANCHI, INDIA

94

IS : 1140 - 1959

Indian Standard

SPECIFICATION FOR LOGS FOR MATCHES

UDC
674·038·3 : 662·53] (083·75) (540)

Timber Sectional Committee, BDC 9

Chairman	
SHRI G. G. TAKLE	Ministry of Food & Agriculture
Members	
SHRI C. A. R. BHADRAN	Inspectorate General of Forests (Ministry of Food & Agriculture)
SHRI K. D. BHATTACHARJEE	Government Test House, Calcutta
DIRECTOR	Central Building Research Institute (Council of Scientific & Industrial Research), Roorkee
SHRI S. R. IYENGAR	Naval Headquarters
DIRECTOR OF CIVIL ENGINEERING (*Alternate*)	
DR. A. N. KAPUR	Development Wing, Ministry of Commerce & Industry
MR. E. JOHN KURUVILA	Anamallais Timber Trust Ltd., Chalakudi
DR. D. NARAYANAMURTI	Forest Research Institute & Colleges, Dehra Dun
SHRI S. S. GHOSH (*Alternate*)	
DR. A. N. NAYER	Directorate of Technical Development (Ministry of Defence)
SHRI R. P. MATHUR (*Alternate*)	
DR. A. PURUSHOTHAM	Forest Research Institute & Colleges, Dehra Dun
SHRI S. RAMAMRITHAM	Directorate General of Civil Aviation (Ministry of Transport & Communications)
SHRI P. C. RAY	P. C. Ray & Co. (India) Ltd., Calcutta
SHRI K. P. SAGREIYA	Forest Department, Government of Madhya Pradesh
SHRI J. C. MEHTA (*Alternate*)	
SHRI A. C. SEKHAR	Forest Research Institute & Colleges, Dehra Dun
SHRI S. M. SIBTAIN	Forest Department, Government of Uttar Pradesh
BAWA SUNDER SINGH	Spedding, Dinga Singh & Co., New Delhi
SHRI P. N. TALWAR	Research, Design & Standardization Organization (Ministry of Railways)
SHRI K. RAMA VARMAN	National Buildings Organization (Ministry of Works, Housing & Supply)
DEPUTY DIRECTOR (MATERIAL) (*Alternate*)	
DR. LAL C. VERMAN (*Ex-officio*)	Director, Indian Standards Institution
Secretary	
SHRI C. S. CHANDRASEKHARA	Deputy Director (Bldg), Indian Standards Institution

Logs for Plywood and Matches Subcommittee, BDC 9 : 11

Convener	
SHRI C. A. R. BHADRAN	Inspectorate General of Forests (Ministry of Food & Agriculture)
Members	
SHRI R. M. DASS	Forest Department, Government of Assam
FOREST UTILIZATION OFFICER	Forest Department, Government of Mysore
ADDITIONAL TECHNICAL ASSISTANT TO THE CHIEF CONSERVATOR OF FORESTS (*Alternate*)	
SHRI S. GOTHBERG	Western India Match Co. Ltd., Bombay
SHRI N. C. JAIN	Plywood Manufacturers' Association of India, Calcutta
SHRI N. N. BOSE (*Alternate*)	
DR. A. N. KAPUR	Development Wing, Ministry of Commerce & Industry
SHRI K. S. LAULY	South Indian Plywood Manufacturers' Association, Feroke
OFFICER-IN-CHARGE, ANDAMAN TIMBER DEPOT	Forest Department, Government of Andaman
REPRESENTATIVE	Sivakasi Chamber of Match Industries, Sivakasi

© *Copyright* 1959 *by*

INDIAN STANDARDS INSTITUTION
MANAK BHAVAN, 9 MATHURA ROAD
NEW DELHI 1

Price Rs **1·50** *August* 1959

95

Indian Standard

SPECIFICATION FOR LOGS FOR MATCHES

0. FOREWORD

0.1 This Indian Standard was adopted by the Indian Standards Institution on 8 May 1959, after the draft finalized by the Timber Sectional Committee had been approved by the Building Division Council.

0.2 The supply of logs suitable for the manufacture of matches and match boxes is of great economic importance to the match industry. To manufacture a fair quality of match boxes and splints, the raw materials, the most important of which is timber, must conform to certain minimum requirements. *Salmalia malabarica* Schott & Endl. (**semul**) has been found suitable for both match boxes and match splints but due to inadequate supplies of this species, the match industry has had to use other available timbers to supplement the supply of *salmalia malabarica*. As the alternate species vary in their characteristics substantially, the Sectional Committee has felt it necessary to lay down the minimum requirements for quality of logs in order to provide the forest departments and the match industry a guide in the extraction of match logs and their purchase by the match factories.

0.3 This standard has been based upon the extensive experience of the match industry, the investigations carried out by the match industry and the Forest Research Institute, Dehra Dun, in regard to the use of suitable timber for matches and match boxes and the statistical data collected by the match industry and the forest departments during many years of match manufacture in the country.

0.4 This specification requires reference to the following Indian Standards:

IS: 401-1954 CODE OF PRACTICE FOR PRESERVATION OF TIMBER

IS: 707-1958 GLOSSARY OF TERMS APPLICABLE TO TIMBER, PLYWOOD AND JOINERY

0.4.1 Wherever a reference to any standard mentioned under **0.4** appears in this specification, it shall be taken as a reference to the latest version of the standard.

0.5 In pursuance of the decision of the Government of India to introduce a uniform system of weights and measures in the country based on the metric system, in this standard, metric dimensions have been used throughout and wherever necessary, equivalent fps units have been given in brackets. As the industry gets accustomed to the use of metric units, it is intended to drop the fps units altogether from the standard.

0.6 For the purpose of deciding whether a particular requirement of this standard is complied with, the final value, observed or calculated, expressing the result of a test or analysis, shall be rounded off in accordance with IS : 2-1949 Rules for Rounding Off Numerical Values. The number of significant places retained in the rounded off value, should be the same as that of the specified value in this standard.

0.7 This standard is intended chiefly to cover the technical provisions relating to logs for matches, and it does not include all the necessary provisions of a contract.

---

1. SCOPE

1.1 This standard covers the minimum requirements for logs of different species for use in the manufacture of match boxes and splints.

2. TERMINOLOGY

2.1 For the purpose of this standard, the following definitions shall apply and for definitions other than those given below, reference may be made to IS : 707-1958:

Crotch — A fork in a log of wood.

Cylindrical — A log is cylindrical when the difference between the big and the small diameters under-bark at either end of the log is less than 7·5 cm (or 3 in.).

Drag-Hole — Hole made at the end of a log to facilitate dragging of the log.

Flute — A longitudinal depression on the surface of a log.

Oval Log — A log is oval when the difference between the small and big diameters at either end of the log is 7·5 cm (or 3 in.) or more.

Slot — A slot made around one end of a log to prevent the drag chain or rope from slipping when the log is dragged.

Snout — Pointed end of a log when felling and logging is done by axe.

Splints — Undipped match sticks, prior to application of chemical head.

Veneer — A thin layer of wood of uniform thickness, obtained by slicing, rotary cutting or sawing.

96 (43

M. G. S. App. F. G. 3].

MYSORE GOVERNMENT

SECRETARIAT.

(*Continuation sheet draft form*).

× pp 39–41/e.F.

ISSUED

Date 8.X.1963.

No: AFD 86 FDP 62 Dt:

To

The C.C.F.

Subject:- Match woods for H/S W.I.H.Co.
— Supply of.

I am directed to enclose a copy of letter No: Nil dated 26.9.63 from H/S W.I.H. Co. with a copy of its enclosure ~~for early~~ with a request to offer remarks thereon early.

J.F.

U. Secy.

Draft.
1.10.63.
2.4/10

66 FDP 62.

97 (44

No.11-14/62-FD
Government of India
Ministry of Food & Agriculture
(Department of Agriculture)

New Delhi, the 17 Oct., Sept., 1963.
Asvina, 1885.

From

Shri S.P.Mohoni,
Under Secretary to the Govt. of India.

To

The Secretary to the Governments of

1) Andhra Pradesh, Hyderabad.
2) Assam, Shillong
3) Bihar, Patna.
4) Mysore, Bangalore.
5) Punjab, Chandigarh.

(Forest Department)

Subject:- Supply of wood to Match Industry.

Sir,

I am directed to refer to this Ministry's letter of even number dated the 22nd Jan.,1963 on the above subject and that the information asked therein may please be sent to this Ministry urgently. to say

Yours faithfully,

(K. N. Jauhari)
for Under Secretary to the Govt. of India

M. G. S. App. F. G. 3].

MYSORE GOVERNMENT

SECRETARIAT.

(*Continuation sheet draft form*).

ISSUED

Date 15/10/1963

No. AFD 86 FDP 62. 98 45 15/10/63

To

Shri S. P. Mohoni,
U. Secy. to G. O. I,
M/F & Agr.
(Dept. of Agr.)
New Delhi.

Subject:- P-44/CF. 44/C

Ref. your letter No. 11-14/62-FD, dt. 1.10.63.

I am directed to state that the instructions contained in your letter No. 11-14/62-FD, dt. 22.1.63, have been conveyed to the C.C.F. in Mysore, for compliance. 34/C

Y. F.

U. Secy.

8.X.63.

3 10/10

WD 012117—GPB—1,00,000—7-3-63

M. G. S. App. F. G. 3].

MYSORE GOVERNMENT

SECRETARIAT.

(*Continuation sheet draft form*).

ISSUED

Date 15.10.1963

Urgent.

No: AFD 86 FDP 62

99 (46

R 15/10/63

To

The C.C.F.

Subject:— P-35/CF.

I am directed to invite reference to this G.K. Dept. letter of even No. 35/C dt. 27.4.63 and request you to inform of the action taken in this regard.

Y. F.

U. Secy.

Intt.

8.X.63.

3 10/10

WD 012117—GPB—1,00,000—7-3-63

100

4

THE WESTERN INDIA MATCH CO., LTD.
INDIAN MERCANTILE CHAMBERS,
Nicol Road, Ballard Estate,
P. O. Box 254,
BOMBAY.

COPY.

REGISTERED.

No.AFD 33 FDP 61.
H:

Dt. 1.10.1964.

The Secretary to the Government of Mysore,
Agriculture and Forest Department,
Mysore Government Secretariat,
Vidhana Soudha,
BANGALORE.

Dear Sir,

We beg to acknowledge receipt of your letter dated 29th September 1964.

MATCHWOOD PLANTATIONS:

We note with regret that Government of Mysore have decided as a general policy not to lease out lands to private industries for raising plantations.

For making matches, 45% of the wood is required for making the boxes and 55% for splints. When planning for the plantation of matchwood, may we suggest plantation of the following species, which would improve the quality of the matches produced in India and perhaps also some day enable our country to export matches and earn foreign exchange:

For Match Boxes: Salmalia Malabarica
Bombax Insigne
Canarium Euphyllum.

For Match Splints: Ailanthus Malabarica
Evodia Roxburghiana
Sterculia Campanulata
Ailanthus Excelsa.

OUR MATCHWOOD REQUIREMENTS FROM MYSORE STATE:

We are grateful for what you have written in the last paragraph of your letter enquiring of us to indicate the quantity of raw material (matchwood) we require of the different species and the period during which we require.

The annual requirements of matchwood to-day are of the order of 144,000 tons of 50 c.ft. each. Allowing for an annual increase in population of 2.15% and rise in the standard of living (which the successive Five Year Plans aim at) and therefore an increase in the consumption of matches from 2.15 sticks (compared to 6.5 sticks in the United Kingdom) to 3.0 sticks per head per day, the annual requirements of matchwood by 1980 would be of the order of 242,000 tons of 50 c.ft. each.

On the matchwood supply front, the Match Industry is already in the beginning of a crisis. We are already faced with the beginnings of matches shortage in the country and this position is bound to steadily worsen until the matchwood plantations undertaken since the beginning of the 5-Year Plans mature. Government of India are worried among other things about the shortage of matches experienced in some parts of the country and have enquired of us if we cannot start a third shift in order to put more matches on the market and curb the present tendency of some links in the chain of distribution to demand a premium on the price at which manufacturers intend the match box to sell. And so far as the Match Industry generally is concerned, it is experiencing difficulty in getting matchwood sufficient to keep even the existing rate of production going.

The position in regard to items of goods, including matches, essential for our day-to-day life is so much engaging the attention of the Government of India that the Prime Minister in his letter of 7th August 1964 addressed to the Chief Ministers of States (and released to the Press) has emphasised the need for selling goods essential for our day-to-day life at fixed prices. For ready reference I attach hereto a copy of the concerned paragraph of that letter.

The present annual requirements of matchwood of our Ambarnath and Madras Factories, which now receive substantial supplies of matchwood from your State, are of the order of 36,000 tons (1.8 million c.ft.). With the increase in the demand for matches and Government's desire to produce more matches, we expect that the matchwood requirements of these two factories would go up to 54,000 tons (2.7 million c.ft.). We are deeply thankful to the Government

of Mysore for the Orders under which we are now extracting matchwood from your State for supply to our Ambarnath and Madras Factories. These Orders cover the period up to 31st December 1967 and we request that this period may please be extended up to 1980, by which time we hope the matchwood plantations undertaken during the first three 5-Year Plans would reach maturity and ease the matchwood supply position.

Matches being an article of every day use to all sections of the community, you will doubtless agree with us that the softwood requirements of the Match Industry should receive preference over the requirements of other softwood-based industries, such as plywood, packing cases, etc., who incidentally can use many other species of wood which the Match Industry cannot.

On page 3 of the Indian Standard Specification for Logs for Matches, No.IS:1140-1959 (copy attached) is given a list of species suitable for match manufacture and we are interested in such of those species as are to be found in the State of Mysore, as also any other softwood species which may prove suitable for match manufacture.

Yours faithfully,
THE WESTERN INDIA MATCH CO., LTD.,

Sd/-

Encl.
TSK.

(Akbar Hydari)
CHAIRMAN.

(True copy)

Copied:VSR/17.11.1964.
28

103 50

Paragraph 15 of letter dated 7th August 1964 addressed by the Prime Minister to the Chief Ministers of the States.

15. While we are in the midst of food grain shortage, I have asked the different ministries concerned to consider the question of prices of some other items of goods which are also essential for our day to day life. Sometimes the prices of these articles lead to an increase in prices of foodgrains. Some of these items are cloth, vegetable oils, sugar, matches, kerosene, tea, soap and Vanaspati. It is important to fix the prices of these items and properly enforce them. These products are of interest to the common man and to the low income groups generally. Prompt action has already been taken in regard to the fixation of prices of popular varieties of cloth and it has been decided not to leave it to voluntary control. We should, as in other countries, generally adopt the practice of goods being sold at fixed prices. In fact there should be display of prices for all essential commodities and they should be sold only at those prices. It should become, more or less a matter of habit for the producer and the seller to know and understand that there will be no undue profiteering at any time. This may take time but we must move in that direction. Will it be possible for some of the shopkeepers at least to set an example? Let it be the duty of their Associations or other voluntary organisations to give a lead in this regard. I am sure that if they do it they will create tremendous goodwill for themselves and also truly serve the people.

(True copy)

Copied:VSR/17.11.1964.

78

104 51

THE WESTERN INDIA MATCH CO., LTD.

BRANCHES:
CALCUTTA : MADRAS
BAREILLY

REGISTERED OFFICE:
INDIAN MERCANTILE CHAMBERS,
NICOL ROAD, BALLARD ESTATE,
P. O. BOX 254.
BOMBAY.

TELEPHONE : 262583 (8 LINES)
TELEGRAMS : "WESTMATCH"
CODE: BENTLEY'S

AGRICULTURE & FOREST SECRETARY
1208
19 NOV 1964
GOVERNMENT OF MYSORE

Your Ref :
Our Ref :

November 17, 1964.

MYSORE GOVT. SECRETARIAT
No. 48521/3
20 NOV 1964
AGRI. & FOREST DEPT (RECEIPT & ISSUE)

G.S. Srinivasan, Esq.,
Secretary,
Agriculture and Forest Department,
Government of Mysore,
Vidhana Soudha,
BANGALORE.

19/11/64

Dear Srinivasan,

Sri A

20/11/64

P/A

Our Matchwood Requirements from Mysore State

When I paid you my courtesy call in your Office on the afternoon of 26th October, you were very busy but you were good enough to advise that, when I next come to Bangalore, we will have a full discussion on the long-term matchwood requirements of the Match Industry and that you will also request the Chief Conservator of Forests, Kaikini, to join the discussions.

Whilst on this subject I may invite your kind attention to our letter dated 1st October 1964 (in reply to your official letter No.AFD 33 FDP 61 of 29th September 1964), in which I have dealt with our requirements of matchwood from Mysore State.

I am coming to Bangalore on the evening of the 22nd November and expect to stay there about 4 or 5 days. I shall contact you after my arrival to ascertain your convenience for the discussions.

With best regards,

May be filed in view of the reply appended hereto.

30.11.64

25/11/64
U. Sag.

Yours sincerely,

(T. Harihara Iyer)
WOOD MANAGER.

H:TVS

105 52

G.S.SRINIVASAN, I.A.S.

Dt.19-11-1964.

PC. 95-11/64

Dear Sri. Harihara Iyer,

I received your letter dated the 17th November 1964 informing me that you would be coming to Bangalore on the evening of 22nd November and is expected to stay for 4 or 5 days.

I shall be leaving Bangalore for Delhi ~~via~~ Madras on 21st morning and returning to Headquarters only on 2nd December 1964.

This is for your kind information.

Yours sincerely,

19/11

(G.S.SRINIVASAN)

Issued 19/11

To

Shri.I.A.Harihara Iyer,
Indian Mercantile Chambers,
Nicol Road, Ballard Estate,
P.O.Box 254, BOMBAY.

106

53

THE WESTERN INDIA MATCH CO., LTD.

BRANCHES AT:
CALCUTTA: MADRAS
BAREILLY

REGISTERED OFFICE:
INDIAN MERCANTILE CHAMBERS,
NICOL ROAD, BALLARD ESTATE,
P. O. BOX 254,
BOMBAY.

TELEPHONE : 262583 (8 LINES)
TELEGRAMS : "WESTMATCH"
CODE: BENTLEY'S

Your Ref:
Our Ref:

1349.
3 DEC 1964

December 3, 1964.

5200/FA
8DEC 1964
AGRI. & FOREST DEPT. (RECEIPT & ISSUE)

G.S. Srinivasan, Esq., I.A.S.,
Secretary,
Agriculture and Forest Department,
Government of Mysore,
Vidhana Soudha,
BANGALORE.

DEPUTY SECRETARY TO GOVT.
No. 1460
8 DEC 1964
AGRICULTURE & FOREST DEPTT.

Dear Srinivasan,

Our Matchwood Requirements from Mysore State

Many thanks for your letter D.O.No.PC.95-11/64 of 19th November.

I expect to be in Bangalore again from the afternoon of the 27th till the morning of the 31st instant and I shall get in touch with you after my arrival to ascertain your convenience for discussing our long-term matchwood requirements from Mysore State.

With best regards,

Yours sincerely,

(T.A. Harihara Iyer)
WOOD MANAGER.

H:TVS

For perusal.

15.12.64.

15/12/64
U. Secy.

107

54

THE WESTERN INDIA MATCH CO., LTD.

BRANCHES:
CALCUTTA : MADRAS
BAREILLY

REGISTERED OFFICE:
INDIAN MERCANTILE CHAMBERS,
GOL ROAD, BALLARD ESTATE,
P. O. BOX 254,
BOMBAY.

TELEPHONE : 262583 (8 LINES)
TELEGRAMS : "WESTMATCH"
CODE: BENTLEY'S

MYSORE GOVT. SECRETARIAT
No. 1774/14
15 APR 1965
AGRI. & FOREST DEPT (RECEIPT & ISSUE)

Your Ref :
Our Ref :

April 10, 1965.

AGRICULTURE & FOREST SECRETARY
700
14 APR 1965
GOVERNMENT OF MYSORE

G.S.Srinivasan, Esq., I.A.S.,
Secretary,
Agriculture and Forest Department,
Government of Mysore,
Vidhana Soudha,
BANGALORE.

Dear Srinivasan,

DEPUTY SECRETARY TO GOVT.
NO. 900
14 APR 1965
AGRICULTURE & FOREST DEPTT.

MATCHWOOD.

You will kindly remember that, when we met some months ago, you were good enough to mention that you would like to have a full discussion on the matchwood supply position and that you were thinking of asking your Chief Conservator of Forests also to join in such a discussion. Somehow, every time since then I had occasion to come to Bangalore, you were otherwise engaged and I write this letter to request you to kindly let me know when I may come to Bangalore for this purpose.* I tried to get you over the telephone to-day but was unsuccessful.

With best regards,

Yours sincerely,

(T.A. Harihara Iyer)
WOOD MANAGER.

Ascertain from CCF which date in this month would suit him after 20th April

14/4/65

H:TSK.

*May I suggest some day after 20th April?

According by? draft letter is sent.

12.4.65.

I shall do today.

14/4/65

15/4/65

17/4/65

(T. S. RAMAIYA),
Under Secretary to Government,
Agriculture & Forest Department.

ISSUED
Date 17-4-65

Appendix F. G.—1]

108 55

SUBJECT ... Timber for M/S WIM Co — Supply of ...

Urgent.

Diary No. of letter replied to .....

Mysore Government Secretariat.

( )

the 196 .

Date 12-4-65

Date of issue.....

Signed by .....

List of enclosures.....

Copied by.....

Examined by.....

Section

File No.

Serial No.

No. AFD 88 FDP 62

To

The C.L.F.

I am directed to state that the Secy. A & F.D. wants to ~~discuss~~ have a full discussion on the matchwood supply position in regard to M/S WIM Co.

I am to request you to intimate which date in this month, after 20.4.65, would suit you for the discussion. The Wood Manager of M/S WIM Co. will be informed of the date of the discussion on hearing from you.

Y. F.

Jr2

U. Secy.

WD 012116—GPB—4,00,000—7-3-63

12.4.65

109 56

THE WESTERN INDIA MATCH CO., LTD.

WIMCO

BRANCHES :
CALCUTTA : MADRAS
BAREILLY

REGISTERED OFFICE :
INDIAN MERCANTILE CHAMBERS,
NICOL ROAD, BALLARD ESTATE,
P. O. BOX 254,
BOMBAY.

TELEPHONE : 262583 (8 LINES)
TELEGRAMS : "WESTMATCH"
CODE: BENTLEY'S

Your Ref :
Our Ref

AGRICULTURE & FOREST DEPARTMENT 740 21 APR 1965 GOVERNMENT OF MYSORE

April 19, 1965.

DEPUTY SECRETARY TO GOVT. NO. 969 21 APR 1965 AGRICULTURE & FOREST DEPTT.

G.S.Srinivasan, Esq., I.A.S.,
Secretary,
Agriculture and Forest Department,
Government of Mysore,
Vidhana Soudha,
BANGALORE.

MYSORE GOVT. SECRETARIAT No. 1857 PA 21 APR 1965 AGRI. & FOREST DEPT. RECEIPT & INDEX

Dear Srinivasan,

MATCHWOOD.

I refer to my letter of 10th April, copy enclosed for ready reference. If some day this week does not suit you, may I suggest some day next week?

Looking forward to hear from you,

With best regards,

Yours sincerely,

(T. A. Harihara Iyer)
WOOD MANAGER.

H:TSK.

29th 4.00 P.M

54/a XXX 21/4/65

21/4/65 - Sri Harihara Iyer is meeting me on 29th at 4.00 PM in connection with assessing match wood supply position. CCF may be requested to join us, bringing whatever info he can.
21/4/65

116
57

THE WESTERN INDIA MATCH CO. LTD.
INDIAN MERCANTILE CHAMBERS,
NICOL ROAD, BALLARD ESTATE,
P. O. BOX 254, BOMBAY BR-1.

April 10, 1965.

G.S.Srinivasan, Esq., I.A.S.,
Secretary,
Agriculture and Forest Department,
Government of Mysore,
Vidhana Soudha,
BANGALORE.

Dear Srinivasan,

MATCHWOOD.

You will kindly remember that, when we met some months ago, you were good enough to mention that you would like to have a full discussion on the matchwood supply position and that you were thinking of asking your Chief Conservator of Forests also to join in such a discussion. Somehow, every time since then I had occasion to come to Bangalore, you were otherwise engaged and I write this letter to request you to kindly let me know when I may come to Bangalore for this purpose.* I tried to get you over the telephone to-day but was unsuccessful.

With best regards,

Yours sincerely,

(T.A. Harihara Iyer)
WOOD MANAGER.

H:TSK.

*May I suggest some day after 20th April?

Appendix F. G.—1]

SUBJECT P-55/CF.

Diary No. of letter replied to .....

Mysore Government Secretariat.

( )

the 196 .

Date of issue.....

Signed by .....

ISSUED Date 23/4/65

List of enclosures.....

Copied by.....

Examined by.....

Section

File No.

Serial No.

No. AFD 86 FDP 62.

To

The C.C.F.

Ref. G.L. of even No: dt. 17.4.65 55/C.

I am directed to state that Shri Harihara Iyer, Wood Manager of W.I.M. Co. is making the Secy. A&F.D. on 24.4.65 at 4 P.M.

I am to request you to join the discussions on the said date & time and bring ~~closely~~ with you

PTO.

what more information you can on this subject.

Y. F.

21. Secy.

Copy forwarded to:—

1. Shri Hoshiar Singh, Wood Manager, M/S W. I. M. Co, Nicol Road, Ballard Estate, P.B. 254, Bombay, w.r.t. his letter dt. 19.4.65.

2. The P.A. to Secy. A & F.

22.4.65.

113

60

GOVERNMENT OF MYSORE

No. AFD 86 FDP 62

MYSORE GOVERNMENT SECRETARIAT,
VIDHANA SOUDHA,

Dated, Bangalore, 23-4-1965

FROM

The *Secretary to the Government of Mysore,*
Agriculture and Forest Department.

To

The Chief Conservator of Forests
in Mysore, Bangalore.

Sir,

Sub: Timber for M/s WIMCO - Supply of -

Ref: Government letter of even No. dated 17-4-1965.

I am directed to state that Shri Harihara Iyer, Wood Manager of WIMCO is meeting the Secretary to Government, Agriculture and Forest Department on 29-4-1965 at 4 P.M.

I am to request you to join the discussions on the said date and time and bring with you whatever information you can on this subject.

Yours faithfully,

Sd/-

(T.S. Ramiya),
Under Secretary to Government,
Agriculture and Forest Department.

ISSUED
23/4/1965

Copy to -

1. Shri Harihara Iyer, Wood Manager, M/s WIMCO., Nicol Road, Bellard Estate, P.B.No.254, Bombay, w.e.f. this letter dt. 19.4.65
2. The Personal Assistant to the Secretary, A & F.D.

T.S. Ramaiya
(T.S. Ramiya),
Under Secretary to Government,
Agriculture and Forest Department.

Appendix F. G.—1]

114 (61

SUBJECT ....Timeline for M/S. W.I.M. Co.....

Diary No. of letter replied to .....

Mysore Government Secretariat.

( )

the 196 .

Date of issue.....

Signed by .....

P-47/CF
(W.M.T).

ISSUED
Date 15-5-1965

xx P-43/CF.

List of enclosures.....

Copied by.....

Examined by.....

Section

File No.

Serial No.

No. AFD 86 FDP 62

To

The C.C.F.

I am directed to enclose a copy of letter from M/S WIMCO dt. 1.10.64 and request you to offer remarks on the request made therein early.

~~Incidentally, your a reference~~ ~~you are attention~~ also is invited to xx G.L. of even No: dt. 8-10-1963 and you are requested to furnish reply thereto without further delay.

y.F.

11/5/65 S/C M. 10/5/65 Secy

9th
-65

115 62

MYSORE GOVT. SECRETARIAT
No. 4862
22 APR 1965
AGRL. & FOREST DEPT (RECEIPT)

Shri G.M.Shankaraiah ,B.Sc.,
A.I.F.C.,
Technical Assistant to the
Chief Conservator of Forests.

NEW PUBLIC OFFICES,
Bangalore.

Dated 21 April 1965..

AGRICULTURE
No. 746
21 APR 1965
GOVERNMENT OF MYSORE

D.O.No.A2(B)35-163/65

Dear Sir,

SPECIAL SECRETARY TO GOVT.
No. 9740
21 APR 1965
AGRICULTURE & FOREST DEPTT.

Sub:- Timber for M/s.WIMCO - Supply of.

Ref:- Your No. AFD-86-FDP-62 dated 17-4-1965.

.....

I am desired to submit that 30th April 1965 would be convenient to the Chief Conservator ofForests for discussions with you in the above connection.

Yours sincerely,

ASHankaraiah
21/4

Shri G.S.Srinivasan, I.A.S.,
Secretary to Government,
Agriculture and Forest Department,
B a n g a l o r e.

.DVE.

AFD 86 FDP 62

116

63

FA

MYSORE GOVT. SECRETARIAT
No. 1881/64
22 APR 1965
AGRL. & FOREST DEPT. (REGIST)

93

AGRICULTURE & FOREST SECRETARIAT
743
21 APR 1965
GOVERNMENT OF MYSORE

21-4-65

C-8

INVEST WISELY
Buy NATIONAL SAVINGS CERTIFICATES

INDIAN POSTS AND TELEGRPAHS DEPARTMENT

No.

Received here at _____ H. _____ M.

0 2050 AG 1549 BOMBAY 20 33 SRINIVASAN

SECRETARY AGRICULTURE AND FOREST DEPARTMENT

VIDHANA SOUDHA BANGALORE ::::

REFERENCE TODAYS TELEPHONE CONVERSATION PROPOSE

ARRIVING BANGALORE TWENTYEIGHTH CALLING ON YOU

TWENTNINTH TRUST THIS ALSO SUITS KAIKINI

TELEPHONING YOU TWENTYFIRST BEST REGARDS :

HARIHARIAYER :

case of Foreign Telegrams only), office of origin ... number (in ... and number of words

This form must accompany any inquiry respecting

Sri Chitragupta Press. Cal.-1—P-1/... dt. 27-4-63 ... 15-1-63 ... 11-9-63—60,000 Bks.

117

THE WESTERN INDIA MATCH CO., LTD.

BRANCHES:
CALCUTTA : MADRAS
BAREILLY

REGISTERED OFFICE:
INDIAN MERCANTILE CHAMBERS,
NICOL ROAD, BALLARD ESTATE,
P. O. BOX 254.
BOMBAY.

TELEPHONE : 262583 (8 LINES)
TELEGRAMS : "WESTMATCH"
CODE: BENTLEY'S

Your Ref :
Our Ref :

AGRICULTURE & FOREST SECRETARY
771
24 APR 1965
GOVERNMENT OF MYSORE

April 22, 1965.

G. S. Srinivasan, Esq., I.A.S.,
Secretary to Government,
Agriculture and Forest Department,
Government of Mysore,
Vidhana Soudha,
BANGALORE.

Dear Srinivasan,

MATCHWOOD.

I refer to our telephone conversation yesterday. Accordingly I am coming to Bangalore on the 28th and calling on you on the 29th afternoon.

Looking forward to meet you again,

With best regards,

Yours sincerely,

(T.A. Harihara Iyer)
WOOD MANAGER.

H:TSK.

86 FDH 62

Mr.Srinivasan, Bangalore. A/c. Westmatch. 20-4-1965. 118/65

D/60

MYSORE GOVT. SECRETARIAT
AGRI & FOREST DEPT
No. 1909/PA
23 APR 1965

B/28/4

SRINIVASAN
SECRETARY
AGRICULTURE AND FOREST DEPARTMENT
VIDHANA SOUDHA
BANGALORE

REFERENCE TODAYS TELEPHONE CONVERSATION PROPOSE ARRIVING BANGALORE TWENTYEIGHTH CALLING ON YOU TWENTYNINTH TRUST THIS ALSO SUITS KAIKINI TELEPHONING YOU TWENTYFIRST BEST REGARDS

D/60

23/4/65

HARIHARAIYER

H:TSK.
20-4-1965.

86 FDP 62

119 66

THE WESTERN INDIA MATCH CO., LTD.

BRANCHES:
CALCUTTA : MADRAS
BAREILLY

REGISTERED OFFICE:
INDIAN MERCANTILE CHAMBERS,
NICOL ROAD, BALLARD ESTATE,
P. O. BOX 254,
BOMBAY.

TELEPHONE : 262583 (8 LINES)
TELEGRAMS : "WESTMATCH"
CODE: BENTLEY'S

Your Ref :
Our Ref : H:

April 27, 1965.

MYSORE GOVT. SECRETARIAT
No. 2081
3 MAY 1965
AGRI. & FORESTRY DEPT. (SECRET)

The Secretary to the Government of Mysore,
Agriculture and Forest Department,
Mysore Government Secretariat,
Vidhana Soudha,
BANGALORE.

D 1/5/65

Dear Sir,

MATCHWOOD

p. 32 ante (copy)

4/5/65

We beg to refer to Government Order No. AFD 86 FDP 62 dated 15th March 1963 raising the prices for matchwood by 20% for a period of three years from 1-1-1963. There has been no change in the retail price of the match box and, as Government desire that the price-line should be held in particular of commodities like matches essential to our day-to-day life, we suggest that the existing rates for matchwood be made valid till 31st December 1967.

As mentioned in paragraph 3 on page 2 of our letter dated 1st October 1964, the Match Industry is already in the beginning of a crisis on the matchwood supply front and we are anxious to get from your State as much matchwood as there is to be had. In case Government feel that there must be some adjustment of rates, we request that we may be given an opportunity of discussing the matter with Government in all its aspects before Government take a decision on the quantum of adjustment.

p. 47 ante

Present Government Orders as regards supplies of matchwood to us cover the period up to 31st December 1967 and, by our letter of 1st October 1964, we have requested that this period may be extended up to 1980. We look forward to your formal Orders agreeing to our request in due course.

120

As mentioned in the last paragraph of our above letter, on page 3 of the Indian Standard Specification for Logs for Matches, No.IS:1140-1959 (copy attached), is shown a list of species suitable for match manufacture and we are interested in all those species which grow in Mysore State, besides any other softwood species which may prove suitable for match manufacture.

Yours faithfully,
THE WESTERN INDIA MATCH CO., LTD.,

WOOD MANAGER.

encl.
TSK.

HTD 88 FDP62
Encl 1.
To,

121

The C.C.F.

Issued 19/10/65

I am directed to enclose a copy of letter D/ 27th Apl. 1965 received from M/S WIMCO Ltd and to request you to offer specific remarks on the request of M/S WIMCO regarding the extension of period of the revised prices of match wood fixed in G.O. No. AF 86 FDP 62 D/15-3-63 upto 31-12-67 instead of upto 31-12-65.

The matter may be treated as very urgent.

J.T.

18/10
DM/S A&F.

14/x

16/x.

122 71

GOVERNMENT OF MYSORE

No. AFD 86 FDP 62

MYSORE GOVERNMENT SECRETARIAT,
VIDHANA SOUDHA,

Dated, Bangalore, 6/9/10...1965.

FROM

The *Secretary to the Government of Mysore,*
Agriculture and Forest Department.

To

The Chief Conservator of Forests
in Mysore, Bangalore.

Sir,

I am directed to enclose a copy of letter dated 27-4-1965 received from M/s WIMCO Ltd., and to request you to offer specific remarks on the request of M/s WIMCO regarding the extension of period of the revised prices of matchwood fixed in Government Order No.AFD 86 FDP 62 dated 15-3-1963 upto 31-12-1967 instead of upto 31-12-1965.

The matter may be treated as very urgent.

Yours faithfully,

(M.W. Winston),
Under Secretary to Government,
Agriculture and Forest Department.

Letter dated 27-4-1965 from the WIMCO Ltd., Bombay, to the Secretary to the Goernment of Mysore, Agriculture and Forest Department, Bangalore

---

MATCHWOOD

We beg to refer to G.O.No.AFD 86 FDP 62 dated 15-3-1963 raising the prices for matchwood by 20% for a period of three years from 1-1-1963. There has been no change in the retail price of the match bos and, as Government desire that the price-line should be held in particular of commodities like matches essential to our day-to-day life, we suggest that the existing rates for matchwood be made valid till 31-12-1967.

As mentioned in paragraph 3 on the page 2 of our letter dated 1-10-1964, the Match industry is already in the beginning of a crisis on the matchwood supply front and we are anxious to get from your State as much matchwood as there is to be had. In case Government feel that there must be some adjustment of rates, we request that we may be given an opportunity of discussing the matter with Government in all its aspects before Government take a decision on the quantum of adjustment.

~~Xxxxxxxxx~~ Present G.Os as regards supplies of matchwood tous cover the period upto 31-12-1967 and by our letter of 1-10-1964 we have requested that this period may be extended upto 1980. We look forward to your formal orders agreeing to our request in due course.

As mentioned in the last paragraph of our above letter, on page 3 of the Indian Standard Specification for Logs for Matches No.IS:1140-1959(copy attached), ~~xxxxxxxxxx~~ is shown a list of species suitable for match manufacture and we are interested in all these species which grow in Mysore State, besides any other softwood species which may prove suitable for match manufacture.

"Copy"

No.A2(B)-2-362/WMC/63-64.

Chief Conservator's Office
Bangalore:Dated: 19th Oct.1965.

To

The Secretary to Government,
Agriculture and Forest Department,
Bangalore.

Sir,

Sub:-Sub-Matchwood for Messrs. Western India Match Co.Ltd.

Ref:-i) Letter Dated 1-10-1964 of Messrs.WIMCO addressed to you.

ii) Your letter No.AFD-86-FDP-62 Dated 15-5-1965.

iii) Letter dated 27-4-1965 of Messrs WIMCOs addressed to you.

- - - -

The existing lease for the extraction and removal of certain Matchwood species by Messrs. The Western India Match Co.Ltd. expires at the end of 31-12-1967 and is subject to renewal by mutual agreement thereafter. As in the case of other Plywood Companies like Messrs. The India Plywood Mfg. Co.(P) Ltd. and Messrs Hunsur Plywood Works and Paper Mills like Messrs. The West Coast Paper Mills Ltd. and Messrs. The Mysore Paper Mills Ltd. in whose favour Government have sanctioned the right of cutting and removal of Plywoods/Bamboos on long range basis, it is equally desirable to renew the existing lease with Messrs WIMCOs for a further period upto 1980 as requested by the Company in their letter Dated 1-10-1964. I recommend consideration of their request.

2. The Company has also suggested the raising of Matchwood plantations of the following Matchwood species.

Match Boxes.

Salmalia malabaricum.
Bombax insigne.
Canarium euphyllum.

Match Splints.

Ailanthus malabarica.
Evodia roxburghiana.
Sterculia campanulata.
Ailanthus excelsa.

This department has been raising Matchwood Plantations and the following details furnish the present extent of plantations, for your information. The present plantations are mainly of the species i.e. Salmalia malabaricum, Ailanthus malabaricum/ excelsa, Machilas macrantha and Evodia roxburghiana.

Period	Acres plantations.
First 5 year Plan Period.	430 acres.
Second -do-	7622 "
Third -do- (during four years only)	about 16000 "

3. The Company is now extracting about 15 to 16,000 tons of Matchwood species from all the Forest areas leased out to it under Government Order Dated 8-11-60. The Company has now indicated that its annual requirements of Matchwood timbers by their two factories at Ambarnath and Madras are of the order of about 36,000 tons and that with the increase in the demand for matches it expects

the demand for Matchwoods to go up to about 54,000 tons a year.

4. About 5 to 7 lakhs of acres of District Forests are to be transferred to the control of the Forest Department for exploitation and proper reafforestation. This question is likely to be finalised are long. This Department will take *the question of raising Matchwood Plantations on a much larger scale provided adequate funds are made available to the Department. As matters stand, Government have assured Messrs WIMCOs to make available adequate quantity of raw material (Matchwoods) in lieu of the Company's request for allotment of Forests areas for raising plantations by themselves.

*up

5. The Company in its letter Dated 27-4-1965 addressed to you has invited your attention to Government Order No. AFD-86-FDP-62 Dated 15-3-1963 and has requested you to continue the rates sanctioned therein till 31st December 1967 as there has been no increase in the retail price structure of Match boxes. As regards the Company's ~~price~~ request for ~~allotment of Forest areas for raising plantations by themselves for~~ the extension of the present lease period upto 1980, I invite your attention to para (1) of this letter.

6. The following are the species conceded to the above Company and the relative rates at which these species are being removed by the above are detailed against each of the said species:

Species.	Girths.	Rate per ton / Rate per cubic metre.
Bombax malabaricum.	33" to 47"	Rs. 57-00 (40-26 per cubic metre.)
-do-	48" to 120"	60-00 (42-38 ")
Ailanthus excelsa.	33" to 120"	56-00 (39-55 ")
" malabaricum.	-do-	56-00 (-do- ")
Alstonia scholaris.	-do-	54 (38-14 ")
Canarium strictum.	-do-	54 (38-14 ")
Elacocarpus tuberculatus.	-do-	54 (38-14 ")
Symplocos spicata.	-do-	54 53-00(37-43 ") vide p.38
Machilas macrantha.	-do-	54-00(38-14 ")
Mangifera indica (subject to the Company's option as to the girths)	33" to 48"	54-00(38-14 ")
	49" to 72"	57-00(40-26 ")
	73" upto 120"	60-00(42-38 ")
Hymenodictyon excelsum.	33" to 120"	53-00(37-43 ")

I suggest that the question of revision of the above rates, which are liable for revision with effect from 1-1-1966 (in view of Government Order No. AFD-86-FDP-62 Dated 15-3-1963), may be discussed at Government level with the representatives of the company and then fixed, as was done previously.

7. In para 4 of the Company's letter Dated 27-4-1965 addressed to you, the Company has said that it is interested in all the species detailed in the Indian Standards Institute specification No.1140-1959, which grow in this State. The other species that are available in the State are:-

Anthocephalus cadamba.
Bombax insigne.
Evodia roxboxburghiana
Gyrocarpus americanus
Sterculia villosa.

125 75

Trewia nudiflora,
Elaeocarpus turbinatus.
Celastrous
Eleocarpus oblongus.
Garuga pinnata.
Saceopetarum tomentosum

Although Dysoxylum malabaricum (White cedar), Lophopetalum wightianum (Bilihebbalasu), and Kydia calycina (Bende) are available, I am not in favour of releasing them as they are required for Defence, manufacture of Artificial Limbs photo frames and production of pulp purposes respectively.

Yours faithfully,

Chief Conservator of Forests.

draft approved by C.C.F.

Copy to the Conservator of Forests Belgaum/Mercara/ Shimoga for information.

N.

[Annexure II]

MYSORE STATE - Royalty Rates.

~~Following are~~ The current rates of Royalty payable ~~to the Mysore Government by WIMCO vs. Plywoods~~ by WIMCO and Indian Plywoods.

Species.		Per ton of 50 c.ft. WIMCO*	Plywoods.
1. Bombax Malabaricum (Salmalia Malabarica)	33"-47" girth	Rs.57/-)	Rs.63/-
-do-	48"-120" girth	Rs.60/-)	
2. Ailanthus Excelsa		Rs.56/-	Rs.63/-
3. Ailanthus Malabarica		Rs.56/-	
4. Alstonia Scholaris		Rs.54/-	Rs.30/-
5. Canarium Strictum		Rs.54/-	Rs.47/-
6. Eleocarpus Tuberculatus		Rs.54/-	Rs.30/-
7. Symplocos Spicata		Rs.54/-	
8. Spondias Mangifera		Rs.53/-	Rs.37/50 (SA)
9. Machilus Macrantha		Rs.54/-	Rs.47/-
10. Mangifera Indica	33"-48" girth	Rs.54/-)	Rs.75/-
-do-	49"-72" "	Rs.57/-)	
-do-	73"-120" "	Rs.60/-)	
11. Hymenodictyon Excelsum		Rs.53/-	Rs.47/-
Lophopetalum Wightianum			Rs.47/-
Anthocephalus Cadamba			Rs.30/-
Hymenodictyon Obovatum			Rs.30/-
Saccopetalum Tomentosum			Rs.22/-
Sterculia Alata/Villosa			Rs.47/-
Trewia Nudiflora			Rs.37/50.

*Valid upto 31-12-1965.

H:TSK.
17-12-1965.

197

No. A2(B)-2-362-WMC/63-64

CHIEF CONSERVAOR'S OFFICE,
Bangalore: Dated: 26 October 1965

To

The Secretary to Government,
Agriculture and Forest Department,
Bangalore.

4792/FA

Sir,

Sub:- Matchwood for M/s-Western India Match Company Ltd.,
Ref:- your No. AFD 86 FDP-62 Dt.19-10-1965

.....

In reply, I invite your attention to this office letter of even No. dated 19-10-1965 wherein the necessary information has already been furnished, vide para 7 of the said letter.

Yours faithfully,

26/10

CHIEF CONSERVATOR OF FORESTS

NRN/-

THE WESTERN INDIA MATCH CO., LTD.

BRANCHES:
CALCUTTA : MADRAS
BAREILLY

REGISTERED OFFICE:
INDIAN MERCANTILE CHAMBERS,
NICOL ROAD, BALLARD ESTATE,
P. O. BOX 254.
BOMBAY.

TELEPHONE : 262583 (8 LINES)
TELEGRAMS : "WESTMATCH"
CODE: BENTLEY'S

Your Ref :
Our Ref :

Bangalore,
December 24, 1965.

Sri B. Rachaiah, B.Sc., B.L.,
Hon'ble Minister for Forests,
Government of Mysore,
BANGALORE.

Dear Sri Rachaiah,

Matchwood from Mysore State.

I am grateful to you for the interview granted to me to-day when I requested that the period of extension of our present agreement may be decided now.

In our letter of 1st October 1964 and 27th April 1965 we have requested that the period be extended to 1980. According to the statement made in Parliament on 23rd August 1963 by the Minister of Industry, it will take at least 35 years for matchwood plantations to mature. According to the same statement, matchwood plantations were undertaken from the First Five Year Plan, i.e. from 1951. It thus follows that the matchwood plantations would not begin to mature until 1986. We therefore request that the period of the present agreement be made valid till 1986.

In our Timber Organisation in Mysore State, there are a number of hands working on a temporary basis and they are anxious to be confirmed in their employment. This is another reason for our requesting for extending the lease period now, so that we could take up the question of making these temporary staff members permanent.

I may mention that the Central Board of Forestry at its meeting in Shillong in 1957 has,

B. RACHAIAH,
Minister for Forests,
Fisheries and Sericulture

having regard to the availability of timber, recommended uniform long lease agreements so as to ensure availability of raw materials on a sustained basis. In the statement in Parliament referred to above, the Minister of Industry also stated that matchwood is in great short supply and that the supply position is going to be acute. As I also mentioned at the meeting yesterday, the Match Industry is facing a crisis on the matchwood front. The present consumption of matchwood by the Match Industry is of the order of over 160,000 tons of 50 c.ft. each and, as a result of increasing population and increase in standard of living, this is expected to go upto 500,000 tons by the turn of the century.

Incidentally, I may mention that we have been getting through the Forest Department matchwood from South Kanara since 1942/43 and from North Kanara since 1943/44.

I now look forward to hear that our request for extending the period of the present agreement to 1986 has been granted.

With respectful regards,

Yours sincerely,

(T.A. Harihara Iyer)
WOOD MANAGER.

H:TSK.

130

(83)

Lr. No. A.F.D. 86 FDP 62 Dated

To.

The C.C.F.

Sir. Sub: Raw-materials — supply to M/s Wimco — Period of lease

Ref: Lr No NIL & 24.12.65 from M/s the WIMCO., Bombay

O. 799

ISSUED
Date 7/3/66

I am directed to enclose a copy of the above representation and request you to furnish ~~a report~~ your remarks in the matter, especially regarding the extension of the period of lease. It may be examined whether the lease may be extended to 20 years as decided in the meeting held on 23rd and 31st Dec 65. and be made effective along with the date of revision of rates.

An immediate report is

Several representations ~~have received~~ were made to Govt. by small match-wood dealers in the State not stating that they are getting timber for their match — splints at present, in view of the commitment made to M/s Wimco. throughout the State. The question of deleting ~~the~~ additional areas conceded in 1960 may also be examined to enable the ~~R.F.O.~~ local ~~industries~~ to get soft-wood, particularly in Shimoga Coorg circle

N. W. 4/3/66
Under Secretary to Government

GOVERNMENT OF MYSORE

85

No. AFD 86 FDP 62

MYSORE GOVERNMENT SECRETARIA
VIDHANA SOUDHA,

Dated, Bangalore, 7.3.1966

FROM

The Secretary to the Government of Mysore,
Agriculture and Forest Department.

To

The Chief Conservator of Forests
in Mysore, Bangalore.

Sir,

Sub: Raw materials - Supply to M/s WIMCO - Period of lease.

Ref: Letter No.Nil dated 24-12-1965 from Mps the WIMCO, Bombay.

I am directed to enclose a copy of the above representation and request you to furnish your remarks in the matter, especially regarding the extension of the period of lease. It may be examined whether the lease may be extended to 20 years as decided in the meetings held on 23rd and 31st December 1965 and be made effective along with the date of revision of rates.

Several representations were made to Government by Small Match-Wood Dealers in the State stating that they are not getting timber for their match-splints at present, in view of the commitment made to M/s WIMCO, throughout the State. The question of deleting additional areas conceeded to M/s WIMCO in 1960 may also be examined to enable the local industries to get soft-wood, particularly in Shimoga and Coorg Circles.

An immediate report is requested.

Yours faithfully,

7/3/66

(M.W. Winston),
Under Secretary to Government,
Agriculture and Forest Department

132
87 83(b)

Letter dated 24-12-1965 from the Western India Mach Co., Ltd., Bombay, to the Hon'ble Minister for Forests, Govt. of Mysore, Bangalore.

Sub: Matchwood from Mysore State.

I am grateful to you for the interview granted to me to-day when I requested that the period of extension of our present agreement may be decided now.

In our letter of 1st October 1964 and 27th April 1965 we have requested that the period be extended to 1980. According to the statement made in Parliament on 23rd August 1963 by the Minister of Industry, it will take at least 35 years for matchwood plantations to mature. According to the same Statement, matchwood plantations were undertaken from the First Five year plan, i.e., from 1951. It thus follows that the matchwood plantations would not begin to mature until 1986. We therefore request that the period of the present agreement be made valid till 1986.

In our Timber organisation in Mysore State, there are a number of hands working on a temporary basis and they are anxious to be confirmed in their employment. This is another reason for our requesting for extending the lease period now, so that we would take up the question of making these temporary staff members permanent.

I may mention that the Central Board of Forestry at its meeting in Shillong in 1957 has, having regard to the availability of timber, recommended uniform long lease agreements so as to ensure availability of raw materials on a sustained basis. In the statemnt in Parliament referred to above, the Minister of Industry also stated that matchwood is in great short supply and that the supply position is going to be acute. As I also mentioned at the meeting yesterday, the Match Industry is facing a crisis on the matchwood front. The present consumption of matchwood by the Match Industry is of the order of over 160,000 tons of 50 Cft each and, as a result of increasing population and incease in standard of living, this is expected to go upto 500,000 tons by the turn of the century.

Incidentally, I may mention that we have been getting through the Forest Department matchwood from South Kanara Since 1942-43 and from North Kanara since 1943/44.

I now look forward to hear that our request for extending the period of the present agreement to 1986 has been granted.

"Copy"

1/7/3

133

N.S.Kaikini, A.I.F.C.,
Chief Conservator of Forests.

New Public Offices,
Bangalore-1,
Dated: 4th April, 1966.

D.O.No.A2(B) - 2-362/WMC/63

Dear Shri Srinivasan,

AGRICULTURE & FORESTS DEPARTMENT OF MYSORE
571
13 APR 1966

Sub:-Raw Materials - Supply to M/s.WIMCo period of lease.

Ref:-(1) Government Order No.AFD-8-TMS-57 (ii) dated 12-2-1963.

(2) Government Order No.AFD-8-TMS-57(11)dated 12-2-1963.

(3) Government letter No.AFD-86-FDP-62 Dated 7-3-1966.

- - - -

AGRICULTURE & FORESTS DEPT.
14 APR 1966

Put up with file

You have enquired in your above (para 1) letter, to examine whether the lease may be ~~executed~~ granted to 20 years as decided in the meeting held on 23rd and 31st December 1965 and be made effective along with the date of revision of rates. I have to point out here that a copy of the proceedings (approved by the Government) have been received with your letter Official Memorandum No. AFD-130-FDP-65 Dated 21-1-1965 and it may be seen therefrom that what is indicated in para (1) of your letter under reply is not at all what is decided in the meeting held on 23-12-1965 vide Para 6.2 of the said proceedings. I reproduce hereunder the very wording of the said decision.

"The period of contracts, wherever they are to be fixed afresh will be for a period of 20 years in future in all cases". coming to the question of sanctioning the extension of lease period in favour of M/s. Western India Match Co., I have to again point out that the present lease expires at end of 31-12-1967 (as per Government Order dated 8-11-1960) and if the decisions arrived at the meeting held on 23-12-65 have to adopted, the lease period should be extended by another 20 years from 1-1-1968 ending with 31-12-1987 and not "be extended to 20 years as decided in the meeting held". The latter statement means that the present lease of 10 years is to be extended by another 10 years (to make up 20 years) and this is contrary to what has been decided in the meeting held under the Chairmanship of the Minister for Forests on 23-12-1965. It is therefore correct to grant extension of lease period by another 20 years from 1-1-1968 when the lease period is to be fixed "afresh".

2. A suggestion has been made to me to examine whether the revised rates could be made effective from "the date of revision of rates". As matters stand, the revised rates in respect of which a decision has already been taken (to increase the existing rates effective prior to 31-12-1965 by 15% for the several species conceded to M/s. WIMCO Vide proceedings of the meeting held on 31-12-1965 (Para 6.7) as also others, "from the date when revision falls due". The rates which existed upto 31-12-1965 were sanctioned for a period of 3 years from 1-1-1963 expiring at the end of 31-12-1965 vide Government Order No. AFD-86-FDP-62 Dated 14-3-1963. Thus 20 years extension should therefore be from 1-1-1968 up to end of 31-12-1987 and not from 1-1-1966.

P.T.O.

3. A copy of representation dated 24-12-1965 from M/s. WIMCOs addressed to Government has been received with your letter under reply. It is also seen that the Manager of the Company had an interview with the Minister for Forests on 24-12-1965 and explained the position. It is no doubt true that a good number of (both in Clerical line and field work) people are working for the WIMCO in Mysore in Mysore State area and as the lease period of 10 years was of a short duration, it is but natural that the Company has not confirmed their services and these people, I am told, are prevailing upon the management to regularise their services to enable them to have the benefits as are applicable to permanent employees. I therefore find it imperative that this question of issuing orders for the extension of the lease by another 20 years from 1-1-1968, is decided without further delay to avoid some unforeseen labour trouble which is not conducive in the present state of emergency. I therefore request you to issue orders (1) regarding the extension of the lease period by another 20 years from 1-1-1968 (so that these employees may have long range benefit) and (ii) regarding the rates to be effective from 1-1-1966. I have however obtained an undertaking from the WIMCOs, pending issue of orders, that they are prepared to agree and pay such rates as are decided and made operative from 1-1-1966 and then only allowed them to extract the timber species conceded to them.

4. Adverting to para 2 of your letter dated 7-3-1966, I have to invite your attention to two Government Order No. AFD-8-TMS-58 (11) dated 12-2-1963 and No. AFD-8-TMS-57 (ii) dated 12-2-1963. In the former, at the instance of the Department, Government have reserved the following four species of matchwoods exclusively for meeting the requirements of the several other match splint factories in the State in the following Forest Divisions of Shimoga Circle

DIVISIONS

Bhadravathi Division (now Bhadravathi and Tarikere Division)

Hassan Division.
Chickmagalur Division.

SPECIES:

Eleocarpus tuberculatus.
Alstonia scholaris.
Evodia roxburghiana.
Symplocos spicata.

In the second Government Order, Government have again, at the instance of the Department permitted M/s. WIMCOs to remove Eleocarpus tuberculatus from the remote areas in the above four Division in lieu of Hymenodictyon excellsum (which is reserved for meeting the local demand by the other Match splints), actually Eleocarpus tuberculisus, Alstonia scholaris, Evodia and Symplocos spicata and Hymenodictyon are best suited for the manufacture of match splints as per Indian Standard Institute Specifications. Thus it may be seen the adequate safeguards have been provided by Government while sanctioning the lease as early as 1963. I feel that the same four species may be reserved in the areas worked by the above Company in Kollegal Mysore, Chamarajanagar, Hunsur and Mercara Divisions. I have requested the Conservator of Forests Shimoga and Mercara to submit necessary proposals (taking into consideration these reservation) for considering the request of these match Industries which have been in operation from 1962, when Government were moved to issue necessary Press Note calling upon all

continued..3.

135 91

Industrialists interested in the starting of match splint factories to obtain a "No objection certificate" from the Forest Department for starting such factories.(It may be said here that no orders of Government have yet been received in this behalf).

In view of what has said above, timber of the species reserved as indicated above and which is fit for splint manufacture, is even now available for these match splint factories. This will meet the suggestion made in para 2 of your letter under reply.

Yours

Shri G.S.Srinivasan, I.A.S.,
Secretary to Government,
Agriculture and Forest Department,
Bangalore.

7.4.86

N.

136

93

N.S. KAIKINI., A.I.F.C.,
Chief Conservator of Forests.

NEW PUBLIC OFFICES,
Bangalore-1,
Dated: 10 June, 1966.

D.O.No. A2(B)-2-362/WMC/63.

Dear Shri Srinivasan,

Sub:- Raw materials - supply to M/s. WIMCO - sanction of rates effective from 1-1-1966 - extension of lease beyond 31-12-1966.

Ref: i) Government letter No. AFD-86-FDP-62 dated 7-3-1966. p 85 g

ii) My D.O. letter of even No. dated 4-4-66. pp 89-91 g

I invite your attention to my above letter and request you to issue orders regarding (i) the rates operative from 1-1-1966 and (ii) the extension of the lease period beyond 31-12-66. The company has been allowed to continue exploitation of matchwood beyond 31-12-1965 on the company giving an undertaking that they are prepared to pay such rates as are finally decided by Government.

Early orders are requested.

Put up immediately 13/6/66

Yours

To

G.S. Srinivasan., I.A.S.,
Secretary to Govt. of Mysore,
Agriculture and Forest Deptt.,
Bangalore.

137
95

THE WESTERN INDIA MATCH CO., LTD.

BRANCHES:
CALCUTTA : MADRAS
BAREILLY

REGISTERED OFFICE:
INDIAN MERCANTILE CHAMBERS,
NICOL ROAD, BALLARD ESTATE,
P. O. BOX 254.
BOMBAY.

TELEPHONE : 262583 (8 LINES)
TELEGRAMS : "WESTMATCH"
CODE: BENTLEY'S

Your Ref:
Our Ref:

OFFICE OF THE MINISTER FOR FORESTS & FISHERIES
No. 1201
8 JUN 1966
BANGALORE

June 3, 1966.

MYSORE GOVT. SECRETARIAT
No. 3001
9 JUN 1966
AGRL. & FOREST DEPT (RECEIPT)

S. A. F.
References pl
7/6/66
B. RACHAIAH,
Minister for Forests and Fisheries.

Sri B. Rachaiah, B.Sc., B.L.,
Hon'ble Minister for Forests,
Government of Mysore,
BANGALORE.

Dear Sri Rachaiah,

Matchwood from Mysore State.

I beg to refer to the meeting held in your Chambers on 23rd December 1965 and to my letters dated 24th December 1965 and 20th March 1966 (copies enclosed for ready reference). I trust that orders have since been issued.

With respectful regards,

Yours sincerely,

(T.A. Harihara Iyer)
WOOD MANAGER.

encl.
H:TSK.

about what stage
1/6/66
P
1/6

—Copy— 138 9/97

THE WESTERN INDIA MATCH CO., LTD.,
INDIAN MERCANTILE CHAMBERS,
NICOL ROAD, BALLARD ESTATE,
P. O. BOX 254,
BOMBAY.

Camp: Bangalore,
December 24, 1965.

Sri B. Rachaiah, B.Sc., B.L.,
Hon'ble Minister for Forests,
Government of Mysore,
BANGALORE.

Dear Sri Rachaiah,

Matchwood from Mysore State.

I am grateful to you for the interview granted to me today when I requested that the period of extension of our present agreement may be decided now.

In our letter of 1st October 1964 and 27th April 1965 we have requested that the period be extended to 1980. According to the statement made in Parliament on 23rd August 1963 by the Minister of Industry, it will take at least 35 years for matchwood plantations to mature. According to the same statement, matchwood plantations were undertaken from the First Five Year Plan, i.e. from 1951. It thus follows that the matchwood plantations would not begin to mature until 1986. We therefore request that the period of the present agreement be made valid till 1986.

Same as p. 79 cf

In our Timber Organisation in Mysore State, there are a number of hands working on a temporary basis and they are anxious to be confirmed in their employment. This is another reason for our requesting for extending the lease period now, so that we could take up the question of making these temporary staff members permanent.

I may mention that the Central Board of Forestry at its meeting in Shillong in 1957 has, having regard to the availability of timber, recommended uniform long lease agreements so as to ensure availability of raw materials on a sustained basis. In the statement in Parliament referred to above, the Minister of Industry also stated that matchwood is in great short supply and that the supply position is going to be acute. As I also mentioned at the meeting yesterday, the Match Industry is facing a crisis on the matchwood front.

The present consumption of matchwood by the match industry is of the order of over 160,000 tons of 50 c.ft. each and, as a result of increasing population and increase in standard of living, this is expected to go upto 500,000 tons by the turn of the century.

Incidentally, I may mention that we have been getting through the Forest Department matchwood from South Kanara since 1942/43 and from North Kanara since 1943/44.

I now look forward to hear that our request for extending the period of the present agreement to 1986 has been granted.

With respectful regards,

Yours sincerely,

(T. A. Harihara Iyer)
WOOD MANAGER.

Copied:VSR/4-6-1966.

140
101

—Copy—

THE WESTERN INDIA MATCH CO. LTD.,
INDIAN MERCANTILE CHAMBERS,
NICOL ROAD, BALLARD ESTATE,
P.O. BOX 254,
BOMBAY

Camp: Bangalore,
20th March 1966.

Sri B. Rachaiah, B.Sc., B.L.,
Hon'ble Minister for Forests,
Government of Mysore,
BANGALORE.

Dear Sri Rachaiah,

I am grateful to you for giving me an opportunity to meet you today.

The match splint factories use mostly Hymenodictyon Excelsum and Eleocarpus sp., to some extent also Evodia Roxburghiana, and, in order to meet their demand, these species are already excluded from the following Divisions:

Divisions	Species	Government Orders
Shimoga Bhadravati Hassan Chikmagalur	Eleocarpus Tuberculatus Alstonia Scholaris Evodia Roxburghiana Symplocos Spicata	G.O. No.AFD 8 TMS 57 dated 8.11.1960
	Hymenodictyon Excelsum	- G.O.No.AFD 8 TMS 57 (ii) dated 12-2-1963.

It will thus be seen that the interests of the match splint factories are already safeguarded to the fullest extent possible.

With respectful regards,

Yours sincerely,

(T. Harihara Iyer)
WOOD MANAGER.

Copied:VSR/4-6-1966.

103

141

No.AFD 86 FDP 62.

To

The Wood Manager,
The Western India Match Co., Ltd.,
Indian Mercantile Chambers,
Nicol Road, Ballard Estate
P.O.Box 254,
Bombay.

Sir,

Sub: Raw materials - Supply of - Sanction of rates effective from 1-1-1966 and extension of lease beyond 31-12-1966 - Discussions regarding -

---

There is a meeting in the Chambers of the Minister for Forests and Fisheries (First Floor) Vidhana Soudha, Bangalore on Thursday the 14th July 1966 at ~~12-00 Noon~~ 11-00 AM to discuss your request. You are requested to attend the same.

Yours faithfully,

Under Secy. to Government,
A & F.Deptt.

ISSUED

Note. Matter now be put up

149 103(a)

GOVERNMENT OF MYSORE

No. AFD 86 FDP 62

MYSORE GOVERNMENT SECRETARIAT,
VIDHANA SOUDHA,

Dated, Bangalore, 6-7-1966.

FROM

The Secretary to the Government of Mysore,
Agriculture and Forest Department.

To

The Wood Manager,
The Western India Match Co. Ltd.,
Indian Mercantile Chambers,
Nicol Road, Ballard Estate,
Post Box No. 254,
BOMBAY.

Sir,

Sub: Raw Materials - Supply of - Sanction of rates effective from 1-1-1966 and extension of lease beyond 31-12-1966 - Discussions - regarding.

There is a meeting in the Chambers of the Minister for Forests and Fisheries (First Floor) Vidhana Soudha, Bangalore, on Thursday the 14th July 1966 at 11.00 A.M. to discuss your requests. You are requested to attend the same.

Yours faithfully,

ISSUED
Date 6-7-1966

(M.W. Winston),
Under Secretary to Government,
Agriculture and Forest Department

RGNN/6-7

143
145

THE WESTERN INDIA MATCH CO., LTD.

BRANCHES :
CALCUTTA : MADRAS
BAREILLY

REGISTERED OFFICE :
INDIAN MERCANTILE CHAMBERS,
NICOL ROAD, BALLARD ESTATE,
P. O. BOX 254.
BOMBAY.

TELEPHONE : 262583 (8 LINES)
TELEGRAMS : " WESTMATCH "
CODE : BENTLEY'S

AGRL & FOREST DEPT (RECEIPT & ISSUE)
No. 3382
29 JUN 1966

Your Ref :

Our Ref :

OFFICE OF THE MINISTER FOR FORESTS & FISHERIES
No. 1360
29 JUN 1966
BANGALORE.

June 25, 1966.

Sri B. Rachaiah, B.Sc., B.L.,
Hon'ble Minister for Forests,
Government of Mysore,
BANGALORE.

S A JP

This may also be discussed on 14-7-66

B. RACHAIAH,
Minister for Forests and Fisheries

Dear Sri Rachaiah,

Matchwood for the Match Industry.

You will have seen from the papers that Match Industry is one of the "Priority Industries" specifically listed by the Government of India and, from this morning's papers, you will also have noticed that included in the list of consumer goods to be handled by Co-operatives is "matches". The position to-day is that the quantity of matches produced in the country is hardly sufficient to meet the demand. We were this week called to Delhi and have been asked by Government of India to step up our production of matches in order to hold the price-line by putting on the market more matches and in order to meet the growing demand for matches. As you know, the main raw material for the manufacture of matches is matchwood and the capacity of the Match Industry to make matches is dependant on the volume of matchwood the Industry is able to get. As forests are State-owned, the capacity of the Match Industry to make matches would be dependant on the matchwood made available to the Industry by the States.

I send herewith a list of softwood species which have been found suitable for the manufacture of matches and, in the present situation, I take the liberty of submitting that it is necessary to reserve for the use of the Match Industry all softwood species found suitable for match manufacture.

With respectful regards,

Yours sincerely,

(T.A. Harihara Iyer)
WOOD MANAGER.

encl.
H:TSK.

Annexure

MATCH INDUSTRY.

Species of Timber suitable for Match Manufacture.
Ref: Indian Standard Specification for Logs for Matches - No.IS:1140 - 1959.

****

Botanical Name.	Trade Name.	Use	
		Splints	Boxes
1. Ailanthus excelsa	maharukh	x	-
2. Ailanthus grandis	borpat	x	-
3. Ailanthus malabarica	mattipal	x	-
4. Alstonia scholaris	chaitam	x	-
5. Anthocephalus cadamba	kadam	x	-
6. Bombax insignae	didu	x	x
7. Canarium euphyllum	white dhup	-	x
8. Canarium strictum	ral dhup	-	x
9. Cryptocarya amygdalina	kalasum	x	x
10. Dysoxylum malabaricum	white cedar	x	x
11. Elaeocarpus tuberculatus	rudrak	x	-
12. Endospermum malaccense	baketa	x	x
13. Evodia roxburghiana	kambli	x	-
14. Gyrocarpus americanus	tanaku	x	-
15. Hymenodictyon excelsum	kuthan	x	-
16. Lophopetalum wightianum	banati	x	x
17. Machilus macrantha	machilus	-	x
18. Mangifera indica	mango	-	x
19. Salmalia malabarica	semul	x	x
20. Sideroxylon longepeticlatum	lambapatti	x	x
21. Spondias mangifera	amra	x	x
22. Sterculia campanulata	papita	x	-
23. Sterculia vellosa	udal	x	-
24. Symplocos spicata	pedipari	x	-
25. Trewia nudiflora	gutel	x	-

Remarks: x = Suitable.
- = Unsuitable.

In addition to the species mentioned above, the Match Industry also uses the following species:

Botanical name.	Trade name.	Use.
1. Alnus nepalensis	alnus	For Splints.
2. Celastrous sp.	bhekal	"
3. Elaeocarpus oblongus	amalthari	"
4. Elaeocarpus turbinatus	khemde	"
5. Garuga pinnata	kakad	"
6. Kydia calycina	pula	"
7. Saccopetalum tomentosum	kanakaida	"

THE WESTERN INDIA MATCH CO. LTD.,

WOOD MANAGER.

H:VSR.
25-6-1966.

NOTE ON THE SUBJECTS FOR DISCUSSION AT THE MEETING TO BE HELD ON 14TH JULY 1966 IN THE CHAMBERS OF THE MINISTER FOR FORESTS AND FISHERIES

.....

I. THE MYSORE CHIPBOARDS LTD MYSORE (AFD 18 FDP 66)

The Mysore Chip Boards have been allotted 50 tons of lops and tops per day at Rs.5/-/per ton for a period of 5 years. They had also been allowed certain species of timber at specified rates, from the Forests of Bettagulli, Kyatadevagudi, Budi-padya, Panjor and B.R.T.Hills - vide Government Order No.AFD 34 FDP 64 dated 28-11-1960, 20-1-1961, 3-10-1961, 7-10-1961 and 23-11-1961.

The Company have requested for the following:-

i) Allotment of 50 tons of lops and tops in a long-range basis for a period of 30 years;

ii) Separate felling series to be allotted to them on a long-range basis which contain softwoods and also

iii) Hardwoods logs of sliceable and peelable quality.

The Chief Conservator of Forests has stated that there is a balance area of 2285 acres in Baropole Felling Series of Makut Range and the same may be allotted to the Company to remove their requirements of timber at their own cost.

The Species requested by the Company are the following:-

Vateria indica (Vellapine)
Canarium strictum (Kaidhupa)
Evodia roxburghiana (Bhattuva - Makali)
Calophyllum tomentosum (Poon)
Hardwickia Pinnata (Chonapaine)
Cedrela toona (Red Cedar)
Magnifera indica (Mango)
Dipterocarpus indicus
Sterculia alata
Hymenodictyon excelsum
Eleocarpus oblongus
Accrocarpus fraxinifolius (Belanji)
White cedar (Cysoxylum malabaricum)
Pali (Dishopsis elliptica)

... 2)

The following species of timber are requested:-

1) Acrocarpus Froxinifolias
2) Dipterocarpus spp.
3) Dichopsis spp.
4) Vateria indica
5) Cedrela toona
6) Lophepetalum weightianum
7) Holigarna spp.

III. THE MYSORE COMMERCIAL UNION LTD (AFD 71 FDP 66)

The Mysore Commercial Union have been allowed extraction of timber at first from Sagar and Hassan Divisions, the rates regarding the same were due for revision with effect from 1-4-1965 in Sagar Division and from 29-1-1966 in Hassan Division as per orders issued in Government Order No.AFD 12 FDP 63 dated 22-3-1963. Additional areas were allotted to the Company from Kuppegudde, Halagalale and Kyasanur of Sagar Division in Government Order No.AFD 12 FDP 63 dated 19-3-1964, the rates sanctioned being effective upto 31-3-1965. As per the decisions arrived at of the meeting held on 31-12-1965 and as has been done in the case of other Companies, these rates are required to be revised. The request of this Company is to allow them to exploit from Sigga and Tavanandi and Gunur State Forests which are presently under lease ordered ~~from~~ for M/s WIMCO. In the meeting held on 31-12-1965, it was decided to allot additional area to and distribute equally the Pushpagiri areas between the Mysore Commercial Union and M/s Indian Plywood Mfg. Co., There may not be any need for the Mysore Commercial Union to be allowed any other areas.

IV. WESTERN INDIA MATCH CO. LTD BOMBAY(AFD 86 FDP 62)

In Government Order No.AFD 86 FDP 62 dated 15-3-1963 the rates for the species conceded to M/s WIMCO was increased by 20% from 1-1-1963 for a period of 3 years which meant that the revision of the rates were again due for further revision

.... 4)

from 1-1-1966 and the Company has been allowed the exploitation of the species allotted to them on an understanding that they will pay at the revised rates fixed by Government with effect from 1-1-1966. The lease period according to the previous orders issued in respect of this Company is upto 31-12-1967 only. The Company has now requested for the extension of the period of lease even from now to enable them to regularise the services of certain employees of theirs who are continuing on temporary basis with them.

There can be no objection for this and according to the decision taken on 31-12-1965, the period of lease may be for a period of 20 years with effect from 1-1-1966(the due date for revision of rates) i.e., upto 31-12-1985. The Chief Conservator of Forests is however of the opinion that the lease period should be 20 years from 1-1-1968 (i.e., upto 31-12-1987). There will be no legal difficulty at all to extend the lease for 20 years from 1-1-1966 only. The only thing we are going is to extend the lease period prior to its expiry for which there shall be no objection. This will be also in consonance with the decisions already taken in the matter of extension of leases.

The Minister for Forests and Fisheries was pleased to Minute that in view of the several representations made to Government by the small Matchwood dealers in Mysore State to the effect that they are not getting enough timber for their Match Splints, the question of deleting additional areas conceded to M/s WIMCO may be examined to enable the local industries to get soft wood particularly in Shimoga and Coorg Circles.

Certain match-splint manufacturers have represented to Government through the Mysore Match Splints and Veneers Manufacturers Association, stating that they should be assured of some supply of softwoods, particularly from the forest areas of Coorg, so that they may not be handicapped in running their

... 5)

industry. A report in the matter was called for from the Chief Conservator of Forests. In an advance copy of the remarks of the Conservator of Forests, Coorg sent to the Chief Conservator of Forests, it is suggested that some specified areas and species may be reserved for the Match - Splints Factories, and also allot lops and tops, left over by other industries to these Match Splint Manufacturers.

The Chief Conservator of Forests has however stated in this file that Government have issued orders reserving the following four species of matchwoods exclusively for meeting the requirements of Match Splint Factories in the Forest Division of Shimoga Circle (Bhadravathi, Tarikere, Hassan and Chickmagalur Divisions)

1. Eleocarpus tuberculatus
2. Alstonia Scholaris
3. Evodia Roxburjiana
4. Simplicos Spicata

Such a decision was taken viz., to allot lops and tops to the Match-splint makers so that the smaller girths may not go to waste. Rates for these smaller girths will have to be fixed and all Industries which do not use the smaller girths should on their responsibility sell it to the Match Company at the rates now to be decided. The Company receiving the supply praying for such supplies.

M/s WIMCO have further represented on 25th June 1966, that they have been asked by the Government of India to step up the production of matches to hold the price line. Enclosing a list of soft-woods suitable for their needs, they are requesting that all these species may be exclusively earmarked to them. The Minister has desired that this may also be discussed at the meeting - List of soft-woods suggested is enclosed as Annexure -I.

... 6)

V. MYSORE MATCH SPLINTS AND VENEERS MANUFACTURERS ASSOCIATION MYSORE (AFD 106 FDP 65)

The Mysore Match Splints and Veneers Manufacturers Association have represented to Government that they should be assued of some supply of softwoods particularly from the Forest areas of Coorg, for smooth running of their ~~fact~~ Industry in the State. The Chief Conservator of Forests has stated that the Government have since 1963 reserved the following four species of Matchwood exclusively for meeting the requirement of the several other matchsplint factories in the State in the Forest Divisions of Shimoga Circle:-

Species	Divisions
1. Eleocarpus tuberculatus 2. Alstonia scholaris 3. Evodia roxburghiana 4. Symplocos spicata	Bhadravathi Division (now Bhadravathi and Tarikere Division) Hassan Division, Chickmagalur Division.

ANNEXURE

Species of Timber suitable for Match Manufacture.

	Botanical name	Trade name
1.	Ailanthus excelsa	maharukh
2.	Ailanthus grandis	borpet
3.	Ailanthus malabarica	mattipal
4.	Alstenia scholaris	chitan
5.	Anthocephalus cadamba	Kadam
6.	Bombax insigne	didu
7.	Canarium euphyllum	white dhup
8.	Canarium strictum	ral dhup
9.	Cryptecarya anygdalina	kalasum
10.	Dysoxylum malabaricum	white cedar
11.	Elobocarpus tuberculatus	rudrak
12.	Endespermum malaccense	bakota
13.	Evodia roxburghiana	kambli
14.	Gyrocarpus americanus	tanaku
15.	Hymenodictyon excelsum	kuthan
16.	Lophopetalum wightianum	banati
17.	Machilus macrantha	machilus
18.	Mangifera indica	mango
19.	Salmalia malabarica	somul
20.	Sideroxylen lengepeticlatum	lambapatti
21.	Spondias mangifera	amra
22.	Sterculia campanulata	papita
23.	Sterculia vellosa	udal
24.	Sympleces spicata	pedipari
25.	Trewia nudiflora	gutel

In addition to the species mentioned above, the Match Industry also uses the following species:-

1.	Alnus nepalensis	alnus
2.	Celastrous sp.	bhekal
3.	Eleocarpus turbinatus	khende
4.	Garuga pinnata	kakad
5.	Kydia calycina	pula
6.	Saccepetalum tomentosum	kakakaida.

.....

152

THE WESTERN INDIA MATCH CO., LTD.

BRANCHES:
CALCUTTA : MADRAS
BAREILLY

REGISTERED OFFICE:
INDIAN MERCANTILE CHAMBERS,
NICOL ROAD, BALLARD ESTATE,
P. O. BOX 254,
BOMBAY.

TELEPHONE : 262583 (8 LINES)
TELEGRAMS : "WESTMATCH"
CODE: BENTLEY'S

REGISTERED.

Your Ref:

Our Ref:

July 8, 1966.

Regn No 172
Ballard Estate

The Secretary to the Government of Mysore,
Agriculture and Forest Department,
Mysore Government Secretariat,
Vidhana Soudha,
BANGALORE.

Dear Sir,

MATCHWOOD.

MYSORE GOVT. SECRETARIAT (AGRL & FOREST DEPT.)
No 3.567
12 JUL 1966

We thank you for your letter No.AFD 86 FRS 62 dated 6th July 1966 and shall be pleased to attend the meeting in the Chambers of the Hon'ble Minister for Forests and Fisheries, Vidhana Soudha, Bangalore, on Thursday, 14th July 1966, at 11-00 a.m. Mr.T.A.Harihara Iyer, our Wood Manager, along with some other members of our Organization will be representing our Company at the above meeting.

In the heading of your letter is stated "...extension of lease beyond 31-12-1966" which obviously is a mistype for "31-12-1967", as according to existing Government Orders and our agreement with Government, the present arrangement is valid up to 31-12-1967.

Yours faithfully,
THE WESTERN INDIA MATCH CO., LTD.,

EXECUTIVE DIRECTOR.

H:ZSK.

153

GOVERNMENT OF MYSORE

No.AED. TMS. 57

Mysore Government Secretariat
'Vidhana Soudha'
Bangalore, dated 4. 12. 57.

From; The Secretary to the Government of Mysore,
Agriculture and Forest Department.

To: M/s. The Western India Match Co. Ltd.,
Indian Mercantile Chambers,
Nicol Road. Ballard Estate, Bombay.

Gentlemen,

Subject:- Matchwood - Sale of.

With reference to the correspondence ending with Shri. Harihara Iyer's letter dated 6th. October 1957 on the subject mentioned above, I am directed to state that the following rates offered by you during the discussions for the species specified ~~therein~~-against are acceptable to Government.

Species	Rates offered by the Co. and accepted by the Government
Bombax	Re. 1 .0 .0 per cft or Rs.50/- per ton (Girth 48" and above)
"	Re. 0 -15 -0 per cft or Rs.46-14-0 per ton (Girth 33" upto and exclusive of 48")
Other Species	Re. 0 -14-0 cft or Rs.43-12-0 per ton.

Machilus Macrantha, Canarium Strictum, Mangifera Indica and any other softwood species that may be subsequently agreed to by the Government.

The rates are accepted subject to the condition that (a) the rat are operative for a period of five years with effect from 1.1.58 (b) the area of operation is restricted to North and South Kanar Districts (c) the exploitation of the area is done entierly at the cost of ~~the cost of~~ the Company under the supervision of the Forest Department (d) the Company accepts the available quantity of matchwood in those areas with a minimum of 2500 cft. per year and (e) they are liable to be altered if there is rise in the ceiling price fixed by the Government of India for the matches.

I am also to request you to communicate to Government your acceptance of the conditions at an early date so that steps could be taken to finalise the agreement before the period of exploitation of the area commences. The Chief Conservator of Forests has been requested to prepare the draft Agreement which will ofcourse include all other conditions and terms.

Yours faithfully,
sd/- (M.N.Gundu Rao)
Deputy Secretary to Government, Agriculture
and Forest Department.

bnr/4.12.

APPENDEX. 11 (Annexure 2)

1. CONCESSION AREAS:-

North and South Kanara Districts (Ref:Govt letter No. AFD. 8 TMS 57 dated 4.12.1957 and Govt. Orders No.AFD. 8. TMS. 57 dated 23.5.1960)- valid from 1.1.58 to 31.12.67.

2. Additional Areas:- (Ref. Govt Order AFD.8. TMS.57 dated 8.11.60 valid from 8.11.60 to 31.12.67)

BELGAUM CIRCLE:

a) Forest Ranges of Yellapur and Kirvati which have been allotted to Hindmatha Industries.	All species in Annexure 1,to extent of 1100 ton until Hindmataha Indust. able to exploit 1800 tons of matchwoods per year in said area.
b) Forest Ranges of Khanapur and Nagargali.	All species in Annexure. 1.

SHIMOGA CIRCLE.

a) Shimoga Division. Bhadravarthi Division. Hassan Division. Chikmagalur Division.	Species in Annexure1 except following: 1.Eleocarpus Tuber. 2.Alstonia Scholari 3.Evodia Roxburg. 4.Symplocos Spicata
Sagar Division(other than the Dt. Forests and Kans and Hassan Ghat Forests.)	Species in Annexure Annexure. 1.
b) Areas assigned to Mysore Commercial Union viz. Hassan G hat Forests and Dt. Forests and Kans of Sagar Division.	Species in Annexure 1 excluding species required by the M y Commercial Union. In these areas WIMCO should be allowed extract matchwoods during year following that in which Mysore Comm.Union completes extraction work.

Eleocarpus Tuber. (Sa ttaga) allowed to be extracted by WIMCO from remote forest areas of Shimoga Bhadravathi,Tarikere Chikmagalur and Hassan Divisions in lieu of Hymenodictyon Excelsum from these Divisions. Valid from 12.2.63 -21.12.67.

PROCEEDINGS OF THE GOVERNMENT OF MYSORE

Sub: Matchwood species ... M/s. WIMCO-
Leasing of.

AGRICULTURE & FOREST DEPARTMENT

G.O.No. AFD 8 TMS 57, Dated, Bangalore 23rd May 1960

Read:-

1. Latter No.AFD.8. TMS. 57 dated 4.12.57.
2. Letters No. A2(b)93-433/57 dt. 2.12.59, 11.12.59, 8.3.60, and 14.3.60 from Chief Conservator of Forests, Bangalore
3. Govt. Order No. AFD 8 TMS. 57 dated 26.3.1960

ORDER.

On the requests of M/s. WIMCO the Chief Conservator of Forests has forwarded certain recommendations to Government in regard to leasing of matchwood to the Company.

On the recommendations of the Chief Conservator of Forests Government is pleased to order as follows:-

1. M/s. WIMCO should be granted extension in the period of the present lease for a further period of five years from 1.1.1963 subject to mutual adjustment of rates after the said date; and also subject to the conditions that terms of lease may be revised even before that period if circumstances so warrant and favourable to Government.

2. The Company should be permitted to extract matchwood to the extent of 1100 tons per year in the areas of Yellapur Kirvati Forests alreddy allotted to M/s. Hindmatha Industries for extraction of matchwood in as much as M/s. Hindmatha Industries have been unable to extract the originally sanctioned quota of 1600 tons of matchwood the said quota has been reduced to 500 tons vide Govt Order No. AFD. 35 FAC 57 dt. 13.6.1958. This concession to Messsrs WIMCO will continue until such a time as Hindmatha Industries are able to exploit 1600 tons of matchwood per year in the said area.

3. M/s. WIMCO should be charged royalty on Mangifere Indica (Mango) logs extracted by them in the North and South Kanara Forests @ Rs.0-15.0 per cft. or Rs.46/14/0 per ton of 50 cft. for logs of 49" to 72" in girth and at Rs.1/- per cft or Rs.50/- per ton of 50 cft for logs of 73" to 120" in girth subject to the Company's option as to the girths. This will have retrospective effect from 1.1.1958.

4. The said Company should be permitted to extract the matchwood species from Talakalale (Sheravati submersion) area. The action of the Chief Conservator of Forests in having allowed the Compant to extractthe matchwood in this area pending Govt Orders is also approved.

Coorg Circle:

a) Coorg Dt, Mysore Dt and Kollegal Division.	Species in Annexure. 1 to extent available and subject to the prescriptions of the working plans in in these areas.
b) Kabini Rover P--roject Forest areas in Mysore Dt.	All matchwood available in the area and acceptable to WIMCO.

PROCEEDINGS OF THE GOVERNMENT OF MYSORE

Sub: Matchwoods for M/s.Western India Match Co., Leasing of.

AGRICULTURE & FOREST DEPARTMENT

.O. No. AFD 8 TMS 57, Dated, Bangalore 8th November 1960.

Read:

1. Government Order No.AFD.8. TMS. 57 dated 26.3.60
2. Government Order No.AFD 8 TMS 57 dt. 23. 5. 60
3. Government Order No. AFD 8 TMS 57 dated 27.8.60
4. Letter No.A2.(b) 93-433/57 dated 10/8/60 from the Chief Conservator of Forests in Mysore, Bangalore.

ORDER.

Government directs that M/s.WIMCO should be permitted to extract matchwood species already sanctioned to them vide Government Letter of 4.12.57 and Government Order 26.3.60 quoted above in the additional areas of Mysore Forests as per following details:

Additional Areas.	Matchwoods.
Belgaum Circle.	
(a) Forest Ranges of Yellapur and Kirvatti (which have been allotted for Hindmatha Industrues)	The species of matchwood sanctioned in Government Orders dated 4.12.57 and 26.3.60, to the extent of 1100 tons per year vide Government Order of 23.5.60.
(b) Forest Ranges of Khanapur and Nagargali.	The species of matchwood sanctioned in Government letter of 4.12.57 and Govt. Order of 26.3.60.
Shimoga Circle.	
(a) Shimoga Division. Bhadravathi Division Hassan Division Chikmagalur Division	The species already sanctioned excluding the following: 1. Eleocarpus Tuberculatus 2. Alstonia Scholaris 3. Evodia Roxburghiana 4. Symplocis Spicata
Sagar Division (other than District Forests and Kans) and Hassan Ghat Forests.	The species already sanctioned

(b) Areas assigned to the Mysore Commercial Union viz.Hassan Ghat Forests and District Forests and Kans of Sagar Division.	The said species excluding the species required by the Mysore Commercial Union. In these areas M/s. WIMCO should be allowed to extract matchwoods during the year following that in which the Mysore Commercial Union complete its extraction work.

Coorg Circle.

(a) Coorg District, Mysore District and Kollegal Division.	The sanctioned species to the extent available and subject to the prescriptions of the working plans in these areas.
(b) Forest areas under the Kabini River project in Mysore Dis--trict.	All matchwoods available in the area and acceptable to W.I.M.Co

M/s. The Western India Match Co., should exploit the area of Kabini River Project first for all suitable matchwoods without prejudice to the Department's arranging for other contracts with a view to redeeming all the remaining useful forest growth before the area gets submerged. After the exploitation of this area is completed the W.I.M.Co may be allowed to extract matchwoods from other areas in the Mysore District.

3. Tow more species of matchwood viz. Lophopetalum Wightianum and Evodia Roxburghiana should be deleted from the list of match--wood species sanctioned for M/s. WIMCO in the Government Order No.AFD 8 TMS 57 dated 26.3.60 pending further consideration of the rates at which these species can be made available.

4. In so far as extraction of additional species of matchwood in North and South Kanara Distrists are concerned the rates of royalty sanctioned in Government Letter of 4.12.57 and Government Order of 26.3.60 should hold good, i.e. at Rs.43/75 per ton.

5. As regards the rates for extraction in the additional areas in the Forest Circles of Belgaum , Shimoga and Coorg, the additional areas are divided into two supply zones viz: Northern Zone for Belagum (exclusive of North Kanara) and the Southern zone for Shimoga and Coorg (exclusive of South Kanara) The following loyalty rates for matchwoods species sanctioned for WIMCO should be charged in the North and Southern zones, speci--cations applicable being the same as exist at present for North and South Kanara Districts.

127 160

PROCEEDINGS OF THE MEETING HELD IN THE CHAMBERS OF THE MINISTER FOR FORESTS ON 14th JULY 1966 TO DISCUSS ADDITIONAL RAW MATERIALS TO PLYWOOD AND MATCH FACTORIES:

(MFD 18 FD 966)

PRESENT:

1. Secretary to Government, Agri. & Forest Department.
2. Chief Conservator of Forests in Mysore, Bangalore.
3. Deputy Secretary to Govt. Agri. & Forest Dept.
4. Under Secretary to Government, A&FD(Forests)
5. Under Secretary to Government, Finance Department.
6. Conservator of Forests, Coorg Circle.
7. Shri T.A. Harihara Iyer - Representing M/s WIMCO
8. Shri K.S. Lauley - Representing Indian Plywood Company.
9. Shri M.S.V. Raghavan - Representing Mysore Chipboards Ltd., and the Match-Splints Manufacturers.
10. Shri Bhagwan - Representing Mysore Commercial Union.

.....

Shri Lauley represented that the Indian Plywoods Ltd., have a proposal to expand their production and establish a Chipboard Factory at Talaguppa for which considerable additional raw materials are required by them. He pleaded that the raw materials as far as possible should be made available from the areas nearest the factory sites.

The representative of the Mysore Commercial Union pleaded that additional quantities of timber be made available to them, so that they can expand their production.

Shri Raghavan argued that his factory at Mysore would be using the entire timber from the trees allotted upto the last lop, as the factory would be manufacturing Chipboards. He said that for want of raw-materials the factory could not start functioning. He pleaded for Barapole felling series and also a reduced rate for lops and tops below 24" girths.

... 2)

Shri Harihara Iyer informed that his Company, M/s WIMCO had been requested by the Government of India to increase their production so as to hold the price-line in respect of matches. He explained the attempts made by the Company to utilise substitutes in the place of match-wood splints and also reduction in size of match-boxes. Unless the Government gave them more timber, he explained, it was well-nigh impossible for them to increase the production, as there was general shortage of timber throughout the country. He requested that a distinction should be made between timber required for Plywood Companies and that required for Match Companies and said reservation of the species suitable for matches should be made. He asked for additional timber. The Chairman explained that it would be necessary for the Company to establish a unit of this Factory within the State to consider additional quantities of timber and areas.

Regarding the match splints manufacturers, who were urging for reservation of certain species for supply to them, the Chief Conservator of Forests explained the necessity for putting ~~up~~ a stop for mushroom growth of such small factories. However, it was felt that a need existed for supplying timber to those which are already established and who face a shortage of supplies as they are not allowed any area for exploitation on their own.

After detailed discussion the following decisions were taken:-

I. <u>INDIAN PLYWOODS</u>

The following additional areas were conceded to this Company.

1) Present Coondapur Division and Uppinangady Ranges of Mangalore Division.

... 3)

2) Pushpagiri Felling Series of Mercara Division to be distributed between Indian Plywood and Mysore Commercial Union Ltd., in equal proportions.

3) Materials of species conceded to the Company from the Tending areas of Shimoga and Koppa.

4) Vateria Indica(Vellapine) in the areas conceded to this Company as a special quota, may be also conceded on a long range basis(excluding the areas which are conceded to other Companies).

II. MYSORE COMMERCIAL UNION:

The following additional areas were conceded to this Company.

1) Mangalore Division excluding Uppinangady Range.

2) Pushpagiri Felling Series of Mercara Division to be distributed between Mysore Commercial Union Ltd., and Indian Plywood Ltd., in equal proportions.

3) The State Forests of Sorab Range viz., Sigga, Tavanandi and Gunur in Sagar Divisions.

4) Belur State Forests of Mudigere Range of Chickmagalur Divisions.

III. As regards the requests of the above two Companies for allotment of timber in Koppa and Chickmagalur Divisions their Representatives have agreed to inspect the areas and submit their proposals for particular forest areas for separate orders of Government.

IV. MYSORE CHIPBOARD LTD:

A. It was decided to allot Barapole Felling Series of Mercara Division to M/s Mysore Chip-Board Ltd., ~~to~~ of the following extent:

(a) 800 tons of softwoods

(b) Lops & Tops resulting from the extractions on item (a), subject to availability, excluding the WIMCO species.

B. It was decided that the rates, for timber-waste, i.e., lops for girths below 24", should be Rs.6/- per ton.

... 4)

130

163

V. WIMCO:

1. Their lease shall be extended by 20 years from 1-1-1968 and orders issued.

2. The following areas will be allotted to the Company during the extended period from 1-1-1968:

(a) North Kanara and Belgaum Divisions excepting Yellapur and Kirwatti Range of North Kanara.

(b) Shimoga Circle - In this area, the following 4 Species are reserved for the Match-Splints Companies.

1. Eleocarpus tuberculatus
2. Alstonia Scholaris
3. Evodia Roxburgiana
4. Simplicos Spicata.

(c) Hassan Division:

WIMCO will work the areas for the species conceded to them excluding those conceded to Mysore Commercial Union. In these areas M/s WIMCO should be allowed to extract Matchweed during the year following the year in which the Mysore Commercial Union completes its extraction work.

(c) (i) The Mysore Commercial Union have agreed to concede Bombax Malaburicum to M/s WIMCO from this areas.

(d) Coorg Circle:

(i) South Kanara District comprising of present Coondapur and Mangalore Divisions.

(ii) Mercara, Mysore, Hunsur.

In this areas M/s WIMCO shall exploit species excluding those conceded to Khaledia Saw Mills, Sullia.

(e) The following four species are only permitted to be extracted from Coorg District(Mercara and part of Hunsur Division).

1. Bombax malabaricum.
2. Machilus Macrantha
3. Canarium strictum
4. Mangifera indica

VI. As regards Mangifera Indica, it was decided that the species shall be exploited on girth basis by the Match and other companies as follows:-

(a) Girths down to 60" for Plywood & Other Companies.

(b) Girths down to 48" from 60" for M/s WIMCO.

..... 5)

VII. MATCH SPLINTS FACTORIES:

i) The Plywood Companies have agrodd to extract and delivery small girth logs below 36" upto 24" of species suitable for match-splints to the match-splints Companies to be delivered outside the Coupes at road sides.

ii) The cost of wood, extraction and delivery will have to be collected by the Plywood Companies from the Match-Splints Companies concerned. The Splint Factories shall be assigned for this purpose to the Plywood Companies, by the Conservators of Forests concerned.

VIII. The decisions above are subject to the condition that the Plywood Companies are to exploit the Species excluding those conceded to Khaledia, WIMCO and the Railways.

N.B: Dipterocurpus species to be reserved for Railways to the extent required by them.

IX. Girths below 36" to 24"(not below 3' in length) shall be designated as 'Short girth logs'. For these girths a rate of Rs.25/- shall be charged for a ton of 50 Cft.

X. The request of the Veneer Mills for allotment of raw material from Palamati Series was deferred for want of a report from Conservator of Forests, Coorg.

.....

165
133

Sub: Raw Materials - Supply of Timber to M/S WIMCO - ~~Revised~~ Revision of Rates and allotment of additional areas - Orders passed.

PROCEEDINGS OF THE GOVERNMENT OF MYSORE

ORDER NO.AFD 120 FDP 66 DATED BANGALORE THE 24TH NOVEMBER 1966.

Read:

Government Order No.AFD 86 FDP 62 dated 15-3-1963.

Preamble:

In the Government Order cited, rates for the species conceded to M/S WIMCO were revised and the Chief Conservator of Forests was requested to furnish a statement showing the rates so fixed. The revised rates were ~~xx~~ ordered to be effective upto 31-12-1965. The Company have however been allowed to exploit the species conceded beyond 1-1-1966, on the condition that they should pay for all quantities removed with effect from 1-1-1966 at the revised rates fixed by Government. The lease period allowed to M/S WIMCO is upto 31-12-1967; but they have been representing that the lease also may be renewed for a further period with effect from 1-1-1968 so as to enable them to regularise the services of certain of their employees who are continued on a temporary basis from year to year. They have also requested for some additional areas in view of the increasing demand for matches in the country. The matter has been examined in detail by Government.

ORDER:

1. In the areas already conceded to M/S WIMCO the species conceded and the rates to be charged for those species shall be as shown in the Annexure.

2. These rates shall be effective from 1-1-1966 upto 30-9-1969 and shall be revised thereafter. Government also reserve the right to revise these rates earlier if necessary in a manner advantageous to Government if circumstances so warrant.

3. The present period of lease which is to expire on 31-12-1967 is extended for a further period upto 31-12-1987.

4. The following areas will be allotted to the Company during the extended period from 1-1-1968:-

(a) North Kanara District and Belgaum Divisions excepting Yellapur and Kirwatti Ranges of North Kanara.

....

(b) Shimoga Circle: In the Shimoga Circle the following 4 species are reserved for the Match-Splints Companies in Shimoga, Bhadravathy, Hassan and Chickmagalur Divisions:-

1. Eleocarpus tuberculatus
2. Alstonia Scholaris
3. Evodia Roxburgiana
4. Simplocos Spicata.

(c) Hassan Division:

WIMCO will work the area for the species conceded to them excluding those conceded to Mysore Commercial Union. In these areas M/S WIMCO should be allowed to extract Matchwood during the year following the year in which the Mysore Commercial Union completes its extraction work.

(i) The Mysore Commercial Union have agreed to concede 'Bombax Malabaricum' to M/S WIMCO from this areas. M/S WIMCO are permitted to exploit the same.

(d) Coorg Circle:

(i) South Kanara District comprising of present Coondapur and Mangalore Divisions.

(ii) Mercara Division, Mysore Division and Hunsur Divisions:-

In these areas M/S WIMCO shall exploit species excluding those conceded to Khaledia Saw Mills, Sullia.

(e) The following four species are only permitted to be extracted from Coorg District (Mercara and part of Hunsur Division).

1. Bombax Malabaricum.
2. Machilus Macrantha
3. Canarium strictum
4. Mangifera indica.

5. In the areas allotted in common with other Companies with effect from 1-1-1968, Mangifera Indica shall be exploited by M/S WIMCO and other companies on girth basis as follows:-

Girth down to 60" for Plywood and Other Companies.

Girths down to 48" for M/S WIMCO.

6. The rates to be charged for the species in the areas newly conceded from 1-1-68 shall be the same as in the

Annexure and shall be effective upto 30-9-1969 in the first instance and shall be revised thereafter. Government reserve the right to revise these rates earlier if necessary, if circumstances so warrant.

By Order and in the name of
the Governor of Mysore,

(M.V.Winston)
Under Secretary to Government,
Agriculture & Forest Department.

To

The Chief Conservator of Forests in Mysore, Bangalore.
The Accountant General through Finance Department.
All Conservators of Forests.
The Western India Match Company Ltd., Nicol Road,
Ballard Estate, P.B.No.254, Bombay.

Copy to:
The Finance Department.
Weekly Gazette.

N/-

M.G.S. M.S.

136

168

ANNEXURE TO GOVERNMENT ORDER NO.AFD 120 FDP 66
DATED BANGALORE 24TH NOVEMBER 1966.

Sl. No.	Name of the species		Rates to be charged per ton of 50 Cft.
1	2		3
			Rs
1.	Bombax Malabaricum Girth 47" down to 33" Girth 120" down to 48"		 65-55 69-00
2.	Ailanthus excelsa	Girths down to 33"	64-40
3.	Ailanthus malabaricum		64-40
4.	Alsotonia Scholaris		62-10
5.	Canarium strictum		62-10
6.	Eleacarpus tuberculatus		62-10
7.	Simplocos spicata		62-10
8.	Spondias mangifera		60-95
9.	Machilas macnantha		62-10
10.	Hymeno Dictyon Excelsum		60-95
11.	Mangifera indica Girth 48" down to 33" Girth 72" down to 49" Girth 120" down to 73"		 62-10 65-55 69-00

(M. V. Winston)
Under Secretary to Government,
Agriculture & Forest Department.

169 137

Sub: Raw Materials - Supply of Match-wood species to M/S Wimco - certain clarifications - Issued.

PROCEEDINGS OF THE GOVERNMENT OF MYSORE.

ORDER NO. AFD 120 FDP 66

DATED 22nd DECEMBER 1967.

Read:

1. Government Order No. AFD 86 FDP 62 dated 15-3-1963.
2. Government Order No. AFD 120 FDP 66 dated 24-11-1966

ADDENDUM.

In the order portion of the Government Order cited second;

I. In para 4(d), for the words:

"In these areas M/S Wimco shall exploit species excluding those conceded to M/S Khaledia Saw Mills, Sullia" the following shall be substituted, viz:-

"M/S Wimco shall also exploit Mangifera Indica in Sullia and Puttur Ranges of South Kanara District over and above 150 tons as allowed to M/S Khaledia Saw Mills, Sullia."

II. Para (e) is renumbered as para (e)(i) and below para (e) (i) so numbered the following para shall be inserted, viz:-

"(e) (ii). The species mentioned in para (e)(i) shall be exploited by M/S Wimco in Kollegal, Chamarajanager and Mysore Divisions also."

delete - vide corrigendum dt 2-3-68

III. The following para shall be inserted after para (e)(ii), viz:-

"(f) The match-wood species conceded to M/S Wimco and available in Pushpagiri areas shall be exploited therefrom upto 1-1-1968 by M/S Wimco."

delete vide corrigendum dt 2-3-68

IV. At the end of para 5 of the Government Order the following note shall be added, viz:-

"Note: For exploitation purposes the Department shall mark Mangifera Indica of girths 60" and above for Plywood Companies, and girths 48" upto 60" for M/S Wimco."

By Order and in the Name of the Governor of Mysore,

(M.V. Winston)
Under Secretary to Government
Agriculture & Forest Department.

To
The Chief Conservator of Forests in Mysore, Bangalore.
The Accountant General, Mysore, Bangalore.
All Conservators of Forests.
M/S Western India Match Co., Ltd., Nicol Road, Ballard Estate, P.Box.No.254, Bombay. / Weekly Gazette/ Extras-30.

170
129

PROCEEDINGS OF THE GOVERNMENT OF MYSORE

Subject:- Raw Materials-Supply of Matchwood species to W/s [illegible].

CORRIGENDUM NO.AFD 120 FRP 66,

BANGALORE, DATED THE 2ND MARCH 1968.

Read:-

Government Order No.AFD 120 FRP 66 dated 24.11.1966.
2)Addendum No.AFD 120 FRP 66 dated 22.12.1967.

CORRIGENDUM

Please delete the words " and Mysore Division" appearing in item II of Addendum dated 22.12.1967 read at Sl.No-(2) above.

Please delete the words "upto 1.1.1969" appearing in item III of Addendum dated 22.12.1967 read at Sl.No(2) above.

By Order and in the name of the
Governor of Mysore,

-sd-

(S.Ramasubramanian)
Under Secretary to Government,
Agriculture & Forest Department.

To
The Chief Conservator of Forests in Mysore, Bangalore.
The Accountant General, Mysore, Bangalore.
All the Conservator of Forests,
The Western Indian Match Co.Ltd., Nicol Road, Ballard Estate, P.B.No. Bombay.

Copy to F.L./Copy to W.O.

/copy/

Chambekar 14.8.69